THERMAL ARC®

A THERMADYNE® Company

HE-100A

COOLANT RECIRCULATOR

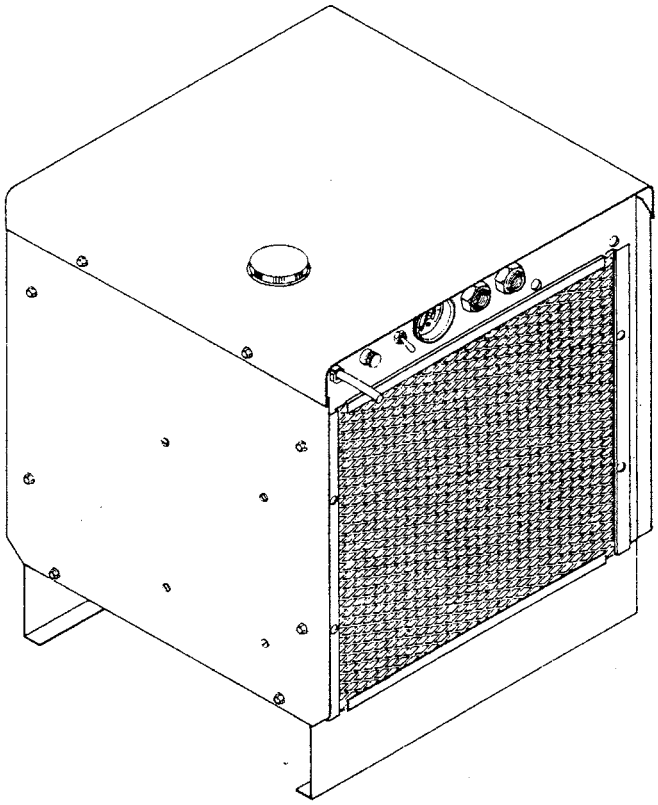

Instruction Manual

November 3, 1998

Manual No. 0-2009

WARNING Read and understand this entire Manual and your employer's safety practices before installing, operating, or servicing the equipment.

WARNING While the information contained in this manual represents our best judgement, Thermal Arc Corporation assumes no liability for its use.

Thermal Arc® HE-100A Coolant Reciculator
Instruction Manual Number 0-2009

Published by:
Thermal Dynamics Corporation
Industrial Park No. 2
West Lebanon, New Hampshire, USA 03784
(603) 298-5711

Nvember 3, 1998

TABLE OF CONTENTS

INTRODUCTION

This manual is divided into four sections:

SECTION 1. General Information, describes HE-100A Coolant Recirculator. It also gives theory of operation and specifications of system components.

SECTION 2. Installation, provides detailed instructions for assembling and inspecting new equipment.

SECTION 3. Operation, lists the operating procedures which will include detailed instructions for using the equipment and tips for safe, efficient use of the unit.

SECTION 4. Service, contains detailed troubleshooting procedures and service procedures for components.

SECTION 5. Parts List, lists replacement parts of the equipment and a cross reference to illustrations for identification..

The information contained in this manual represents our best judgment but Thermal Arc Corporation assumes no liability for its use.

NOTES, CAUTIONS AND WARNINGS

Throughout this manual, notes, cautions and warnings are used to call attention to particular information.

The method used to identify these highlights, and the purpose for which each is used, are as follows:

NOTE:

An operation, procedure and background information which aids the operator in efficient use of the machine, helps the serviceman in performing maintenance or requires additional emphasis.

CAUTION

An operational procedure which, if not properly followed, may cause damage to the equipment.

WARNING

An operational procedure which, if not followed, may cause injury to the operator or others in the operating area.

Important Safety Precautions

WARNING

OPERATION AND MAINTENANCE OF PLASMA ARC EQUIPMENT CAN BE DANGEROUS AND HAZARDOUS TO YOUR HEALTH.

To prevent possible injury, read, understand and follow all warnings, safety precautions and instructions before using the equipment. Call 1-603-298-5711 or your local distributor if you have any questions.

GASES AND FUMES

Gases and fumes produced during the plasma cutting process can be dangerous and hazardous to your health.

- Keep all fumes and gases from the breathing area. Keep your head out of the welding fume plume.
- Use an air-supplied respirator if ventilation is not adequate to remove all fumes and gases.
- The kinds of fumes and gases from the plasma arc depend on the kind of metal being used, coatings on the metal, and the different processes. You must be very careful when cutting or welding any metals which may contain one or more of the following:

Antimony	Chromium	Mercury
Arsenic	Cobalt	Nickel
Barium	Copper	Selenium
Beryllium	Lead	Silver
Cadmium	Manganese	Vanadium

- Always read the Material Safety Data Sheets (MSDS) that should be supplied with the material you are using. These MSDSs will give you the information regarding the kind and amount of fumes and gases that may be dangerous to your health.
- For information on how to test for fumes and gases in your workplace, refer to item 1 in Publications.
- Use special equipment, such as water or down draft cutting tables, to capture fumes and gases.
- Do not use the plasma torch in an area where combustible or explosive gases or materials are located.
- Phosgene, a toxic gas, is generated from the vapors of chlorinated solvents and cleansers. Remove all sources of these vapors.

ELECTRIC SHOCK

Electric Shock can injure or kill. The plasma arc process uses and produces high voltage electrical energy. This electric energy can cause severe or fatal shock to the operator or others in the workplace.

- Never touch any parts that are electrically "live" or "hot."
- Wear dry gloves and clothing. Insulate yourself from the work piece or other parts of the welding circuit.
- Repair or replace all worn or damaged parts.
- Extra care must be taken when the workplace is moist or damp.
- Install and maintain equipment according to NEC code, refer to item 9 in Publications.
- Disconnect power source before performing any service or repairs.
- Read and follow all the instructions in the Operating Manual.

FIRE AND EXPLOSION

Fire and explosion can be caused by hot slag, sparks, or the plasma arc.

- Be sure there is no combustible or flammable material in the workplace. Any material that cannot be removed must be protected.
- Ventilate all flammable or explosive vapors from the workplace.
- Do not cut or weld on containers that may have held combustibles.
- Provide a fire watch when working in an area where fire hazards may exist.
- Hydrogen gas may be formed and trapped under aluminum workpieces when they are cut underwater or while using a water table. **DO NOT** cut aluminum alloys underwater or on a water table unless the hydrogen gas can be eliminated or dissipated. Trapped hydrogen gas that is ignited will cause an explosion.

NOISE

Noise can cause permanent hearing loss. Plasma arc processes can cause noise levels to exceed safe limits. You must protect your ears from loud noise to prevent permanent loss of hearing.

- To protect your hearing from loud noise, wear protective ear plugs and/or ear muffs. Protect others in the workplace.
- Noise levels should be measured to be sure the decibels (sound) do not exceed safe levels.
- For information on how to test for noise, see item 1 in Publications.

PLASMA ARC RAYS

Plasma Arc Rays can injure your eyes and burn your skin. The plasma arc process produces very bright ultra violet and infra red light. These arc rays will damage your eyes and burn your skin if you are not properly protected.

- To protect your eyes, always wear a welding helmet or shield. Also always wear safety glasses with side shields, goggles or other protective eye wear.
- Wear welding gloves and suitable clothing to protect your skin from the arc rays and sparks.
- Keep helmet and safety glasses in good condition. Replace lenses when cracked, chipped or dirty.
- Protect others in the work area from the arc rays. Use protective booths, screens or shields.
- Use the shade of lens as recommended in Publications, item 4.

Publications

Refer to the following standards or their latest revisions for more information:

1. OSHA, SAFETY AND HEALTH STANDARDS, 29CFR 1910, obtainable from the Superintendent of Documents, U.S. Government Printing Office, Washington, D.C. 20402
2. ANSI Standard Z49.1, SAFETY IN WELDING AND CUTTING, obtainable from the American Welding Society, 550 N.W. LeJeune Rd, Miami, FL 33126
3. NIOSH, SAFETY AND HEALTH IN ARC WELDING AND GAS WELDING AND CUTTING, obtainable from the Superintendent of Documents, U.S. Government Printing Office, Washington, D.C. 20402
4. ANSI Standard Z87.1, SAFE PRACTICES FOR OCCUPATION AND EDUCATIONAL EYE AND FACE PROTECTION, obtainable from American National Standards Institute, 1430 Broadway, New York, NY 10018
5. ANSI Standard Z41.1, STANDARD FOR MEN'S SAFETY-TOE FOOTWEAR, obtainable from the American National Standards Institute, 1430 Broadway, New York, NY 10018
6. ANSI Standard Z49.2, FIRE PREVENTION IN THE USE OF CUTTING AND WELDING PROCESSES, obtainable from American National Standards Institute, 1430 Broadway, New York, NY 10018
7. AWS Standard A6.0, WELDING AND CUTTING CONTAINERS WHICH HAVE HELD COMBUSTIBLES, obtainable from American Welding Society, 550 N.W. LeJeune Rd, Miami, FL 33126
8. NFPA Standard 51, OXYGEN-FUEL GAS SYSTEMS FOR WELDING, CUTTING AND ALLIED PROCESSES, obtainable from the National Fire Protection Association, Batterymarch Park, Quincy, MA 02269
9. NFPA Standard 70, NATIONAL ELECTRICAL CODE, obtainable from the National Fire Protection Association, Batterymarch Park, Quincy, MA 02269
10. NFPA Standard 51B, CUTTING AND WELDING PROCESSES, obtainable from the National Fire Protection Association, Batterymarch Park, Quincy, MA 02269
11. CGA Pamphlet P-1, SAFE HANDLING OF COMPRESSED GASES IN CYLINDERS, obtainable from the Compressed Gas Association, 1235 Jefferson Davis Highway, Suite 501, Arlington, VA 22202
12. CSA Standard W117.2, CODE FOR SAFETY IN WELDING AND CUTTING, obtainable from the Canadian Standards Association, Standards Sales, 178 Rexdale Boulevard, Rexdale, Ontario, Canada M9W 1R3
13. NWSA booklet, WELDING SAFETY BIBLIOGRAPHY obtainable from the National Welding Supply Association, 1900 Arch Street, Philadelphia, PA 19103
14. American Welding Society Standard AWSF4.1, RECOMMENDED SAFE PRACTICES FOR THE PREPARATION FOR WELDING AND CUTTING OF CONTAINERS AND PIPING THAT HAVE HELD HAZARDOUS SUBSTANCES, obtainable from the American Welding Society, 550 N.W. LeJeune Rd, Miami, FL 33126
15. ANSI Standard Z88.2, PRACTICE FOR RESPIRATORY PROTECTION, obtainable from American National Standards Institute, 1430 Broadway, New York, NY 10018

Note, Attention et Avertissement

Dans ce manuel, les mots "note," "attention," et "avertissement" sont utilisés pour mettre en relief des informations à caractère important. Ces mises en relief sont classifiées comme suit :

NOTE

Toute opération, procédure ou renseignement général sur lequel il importe d'insister davantage ou qui contribue à l'efficacité de fonctionnement du système.

ATTENTION

Toute procédure pouvant résulter l'endommagement du matériel en cas de non-respect de la procédure en question.

AVERTISSEMENT

Toute procédure pouvant provoquer des blessures de l'opérateur ou des autres personnes se trouvant dans la zone de travail en cas de non-respect de la procédure en question.

Precautions De Securite Importantes

AVERTISSEMENT

L'OPÉRATION ET LA MAINTENANCE DU MATÉRIEL DE SOUDAGE À L'ARC AU JET DE PLASMA PEUVENT PRÉSENTER DES RISQUES ET DES DANGERS DE SANTÉ.

Il faut communiquer aux opérateurs et au personnel TOUS les dangers possibles. Afin d'éviter les blessures possibles, lisez, comprenez et suivez tous les avertissements, toutes les précautions de sécurité et toutes les consignes avant d'utiliser le matériel. Composez le + 603-298-5711 ou votre distributeur local si vous avez des questions.

FUMÉE et GAZ

La fumée et les gaz produits par le procédé de jet de plasma peuvent présenter des risques et des dangers de santé.

- Eloignez toute fumée et gaz de votre zone de respiration. Gardez votre tête hors de la plume de fumée provenant du chalumeau.
- Utilisez un appareil respiratoire à alimentation en air si l'aération fournie ne permet pas d'éliminer la fumée et les gaz.
- Les sortes de gaz et de fumée provenant de l'arc de plasma dépendent du genre de métal utilisé, des revêtements se trouvant sur le métal et des différents procédés. Vous devez prendre soin lorsque vous coupez ou soudez tout métal pouvant contenir un ou plusieurs des éléments suivants:

antimoine	cadmium	mercure
argent	chrome	nickel
arsenic	cobalt	plomb
baryum	cuivre	sélénium
béryllium	manganèse	vanadium

- Lisez toujours les fiches de données sur la sécurité des matières (sigle américain "MSDS"); celles-ci devraient être fournies avec le matériel que vous utilisez. Les MSDS contiennent des renseignements quant à la quantité et la nature de la fumée et des gaz pouvant poser des dangers de santé.
- Pour des informations sur la manière de tester la fumée et les gaz de votre lieu de travail, consultez l'article 1 et les documents cités à la page v.
- Utilisez un équipement spécial tel que des tables de coupe à débit d'eau ou à courant descendant pour capter la fumée et les gaz.
- N'utilisez pas le chalumeau au jet de plasma dans une zone où se trouvent des matières ou des gaz combustibles ou explosifs.
- Le phosgène, un gaz toxique, est généré par la fumée provenant des solvants et des produits de nettoyage chlorés. Eliminez toute source de telle fumée.

CHOC ELECTRIQUE

Les chocs électriques peuvent blesser ou même tuer. Le procédé au jet de plasma requiert et produit de l'énergie électrique haute tension. Cette énergie électrique peut produire des chocs graves, voire mortels, pour l'opérateur et les autres personnes sur le lieu de travail.

- Ne touchez jamais une pièce "sous tension" ou "vive"; portez des gants et des vêtements secs. Isolez-vous de la pièce de travail ou des autres parties du circuit de soudage.
- Réparez ou remplacez toute pièce usée ou endommagée.
- Prenez des soins particuliers lorsque la zone de travail est humide ou moite.
- Montez et maintenez le matériel conformément au Code électrique national des Etats-Unis. (Voir la page *v*, article 9.)
- Débranchez l'alimentation électrique avant tout travail d'entretien ou de réparation.
- Lisez et respectez toutes les consignes du Manuel de consignes.

INCENDIE ET EXPLOSION

Les incendies et les explosions peuvent résulter des scories chaudes, des étincelles ou de l'arc de plasma. Le procédé à l'arc de plasma produit du métal, des étincelles, des scories chaudes pouvant mettre le feu aux matières combustibles ou provoquer l'explosion de fumées inflammables.

- Soyez certain qu'aucune matière combustible ou inflammable ne se trouve sur le lieu de travail. Protégez toute telle matière qu'il est impossible de retirer de la zone de travail.
- Procurez une bonne aération de toutes les fumées inflammables ou explosives.
- Ne coupez pas et ne soudez pas les conteneurs ayant pu renfermer des matières combustibles.
- Prévoyez une veille d'incendie lors de tout travail dans une zone présentant des dangers d'incendie.
- Le gas hydrogène peut se former ou s'accumuler sous les pièces de travail en aluminium lorsqu'elles sont coupées sous l'eau ou sur une table d'eau. NE PAS couper les alliages en aluminium sous l'eau ou sur une table d'eau à moins que le gas hydrogène peut s'échapper ou se dissiper. Le gas hydrogène accumulé explosera si enflammé.

RAYONS D'ARC DE PLASMA

Les rayons provenant de l'arc de plasma peuvent blesser vos yeux et brûler votre peau. Le procédé à l'arc de plasma produit une lumière infra-rouge et des rayons ultra-violets très forts. Ces rayons d'arc nuiront à vos yeux et brûleront votre peau si vous ne vous protégez pas correctement.

- Pour protéger vos yeux, portez toujours un casque ou un écran de soudeur. Portez toujours des lunettes de sécurité munies de parois latérales ou des lunettes de protection ou une autre sorte de protection oculaire.
- Portez des gants de soudeur et un vêtement protecteur approprié pour protéger votre peau contre les étincelles et les rayons de l'arc.
- Maintenez votre casque et vos lunettes de protection en bon état. Remplacez toute lentille sale ou comportant fissure ou rognure.
- Protégez les autres personnes se trouvant sur la zone de travail contre les rayons de l'arc en fournissant des cabines ou des écrans de protection.
- Respectez le teint de lentille recommandé dans le article 4, page 5.

BRUIT

Le bruit peut provoquer une perte permanente de l'ouïe. Les procédés de soudage à l'arc de plasma peuvent provoquer des niveaux sonores supérieurs aux limites normalement acceptables. Vous dú4ez vous protéger les oreilles contre les bruits forts afin d'éviter une perte permanente de l'ouïe.

- Pour protéger votre ouïe contre les bruits forts, portez des tampons protecteurs et/ou des protections auriculaires. Protégez également les autres personnes se trouvant sur le lieu de travail.
- Il faut mesurer les niveaux sonores afin d'assurer que les décibels (le bruit) ne dépassent pas les niveaux sûrs.
- Pour des renseignements sur la manière de tester le bruit, consultez l'article 1, page v.

Documents De Reference

Consultez les normes suivantes ou les révisions les plus récentes ayant été faites à celles-ci pour de plus amples renseignements :

1. OSHA, NORMES DE SÉCURITÉ DU TRAVAIL ET DE PROTECTION DE LA SANTÉ, 29CFR 1910, disponible auprès du Superintendent of Documents, U.S. Government Printing Office, Washington, D.C. 20402
2. Norme ANSI Z49.1, LA SÉCURITÉ DES OPÉRATIONS DE COUPE ET DE SOUDAGE, disponible auprès de la Société Américaine de Soudage (American Welding Society), 550 N.W. LeJeune Rd., Miami, FL 33126
3. NIOSH, LA SÉCURITÉ ET LA SANTÉ LORS DES OPÉRATIONS DE COUPE ET DE SOUDAGE À L'ARC ET AU GAZ, disponible auprès du Superintendent of Documents, U.S. Government Printing Office, Washington, D.C. 20402
4. Norme ANSI Z87.1, PRATIQUES SURES POUR LA PROTECTION DES YEUX ET DU VISAGE AU TRAVAIL ET DANS LES ECOLES, disponible de l'Institut Américain des Normes Nationales (American National Standards Institute), 1430 Broadway, New York, NY 10018
5. Norme ANSI Z41.1, NORMES POUR LES CHAUSSURES PROTECTRICES, disponible auprès de l'American National Standards Institute, 1430 Broadway, New York, NY 10018

6. Norme ANSI Z49.2, PRÉVENTION DES INCENDIES LORS DE L'EMPLOI DE PROCÉDÉS DE COUPE ET DE SOUDAGE, disponible auprès de l'American National Standards Institute, 1430 Broadway, New York, NY 10018

7. Norme A6.0 de l'Association Américaine du Soudage (AWS), LE SOUDAGE ET LA COUPE DE CONTENEURS AYANT RENFERMÉ DES PRODUITS COMBUSTIBLES, disponible auprès de la American Welding Society, 550 N.W. LeJeune Rd., Miami, FL 33126

8. Norme 51 de l'Association Américaine pour la Protection contre les Incendies (NFPA), LES SYSTEMES À GAZ AVEC ALIMENTATION EN OXYGENE POUR LE SOUDAGE, LA COUPE ET LES PROCÉDÉS ASSOCIÉS, disponible auprès de la National Fire Protection Association, Batterymarch Park, Quincy, MA 02269

9. Norme 70 de la NFPA, CODE ELECTRIQUE NATIONAL, disponible auprès de la National Fire Protection Association, Batterymarch Park, Quincy, MA 02269

10. Norme 51B de la NFPA, LES PROCÉDÉS DE COUPE ET DE SOUDAGE, disponible auprès de la National Fire Protection Association, Batterymarch Park, Quincy, MA 02269

11. Brochure GCA P-1, LA MANIPULATION SANS RISQUE DES GAZ COMPRIMÉS EN CYLINDRES, disponible auprès de l'Association des Gaz Comprimés (Compressed Gas Association), 1235 Jefferson Davis Highway, Suite 501, Arlington, VA 22202

12. Norme CSA W117.2, CODE DE SÉCURITÉ POUR LE SOUDAGE ET LA COUPE, disponible auprès de l'Association des Normes Canadiennes, Standards Sales, 178 Rexdale Boulevard, Rexdale, Ontario, Canada, M9W 1R3

13. ivret NWSA, BIBLIOGRAPHIE SUR LA SÉCURITÉ DU SOUDAGE, disponible auprès de l'Association Nationale de Fournitures de Soudage (National Welding Supply Association), 1900 Arch Street, Philadelphia, PA 19103

14. Norme AWSF4.1 de l'Association Américaine de Soudage, RECOMMANDATIONS DE PRATIQUES SURES POUR LA PRÉPARATION À LA COUPE ET AU SOUDAGE DE CONTENEURS ET TUYAUX AYANT RENFERMÉ DES PRODUITS DANGEREUX , disponible auprès de la American Welding Society, 550 N.W. LeJeune Rd., Miami, FL 33126

15. Norme ANSI Z88.2, PRATIQUES DE PROTECTION RESPIRATOIRE, disponible auprès de l'American National Standards Institute, 1430 Broadway, New York, NY 10018

Declaration of Conformity

Manufacturer: Thermal Arc, Inc.
Address: 2200 Corporate Drive
Troy, Ohio 45373-1085
USA

The equipment described in this manual conforms to all applicable aspects and regulations of the 'Low Voltage Directive' (European Council Directive 73/23/EEC as amended by Council Directive 93/68/EEC) and to the National legislation for the enforcement of this Directive.

Serial numbers are unique with each individual piece of equipment and details description, parts used to manufacture a unit and date of manufacture.

National Standard and Technical Specifications

The product is designed and manufactured to a number of standards and technical requirements among them are:

* CSA (Canadian Standards Association) standard C22.2 number 60 for Arc welding equipment.

* UL (Underwriters Laboratory) rating 94VO flammability testing for all printed-circuit boards used.

* ISO/IEC 60974-1 (BS 638-PT10) (EN 60 974-1) applicable to welding equipment and associated accessories.

* Extensive product design verification is conducted at the manufacturing facility as part of the routine design and manufacturing process. This is to ensure the product is safe, when used according to instructions in this manual and related industry standards, and performs as specified. Rigorous testing is incorporated into the manufacturing process to ensure the manufactured product meets or exceeds all design specifications.

Thermal Dynamics has been manufacturing products for more than 30 years, and will continue to achieve excellence in our area of manufacture.

Manufacturers responsible representative: David Ashworth
Vice President & Managing Director
Thermadyne Europe
Chorley England.

Statement of Warranty

LIMITED WARRANTY: Thermal Arc®, Inc., A Thermadyne Company, warrants that its products will be free of defects in workmanship or material. Should any failure to conform to this warranty appear within the time period applicable to the Thermal Arc products as stated below, Thermal Arc shall, upon notification thereof and substantiation that the product has been stored, installed, operated, and maintained in accordance with Thermal Arc's specifications, instructions, recommendations and recognized standard industry practice, and not subject to misuse, repair, neglect, alteration, or accident, correct such defects by suitable repair or replacement, at Thermal Arc's sole option, of any components or parts of the product determined by Thermal Arc to be defective.

THERMAL ARC MAKES NO OTHER WARRANTY, EXPRESS OR IMPLIED. THIS WARRANTY IS EXCLUSIVE AND IN LIEU OF ALL OTHERS, INCLUDING, BUT NOT LIMITED TO ANY WARRANTY OF MERCHANTABILITY OR FITNESS FOR ANY PARTICULAR PURPOSE.

LIMITATION OF LIABILITY: Thermal Arc shall not under any circumstances be liable for special or consequential damages, such as, but not limited to, damage or loss of purchased or replacement goods, or claims of customers of distributor (hereinafter "Purchaser") for service interruption. The remedies of the Purchaser set forth herein are exclusive and the liability of Thermal Arc with respect to any contract, or anything done in connection therewith such as the performance or breach thereof, or from the manufacture, sale, delivery, resale, or use of any goods covered by or furnished by Thermal Arc whether arising out of contract, negligence, strict tort, or under any warranty, or otherwise, shall not, except as expressly provided herein, exceed the price of the goods upon which such liability is based. No employee, agent, or representative of Thermal Arc is authorized to change this warranty in any way or grant any other warranty.

THIS WARRANTY BECOMES INVALID IF REPLACEMENT PARTS OR ACCESSORIES ARE USED WHICH IN THERMAL ARC'S SOLE JUDEGMENT MAY IMPAIR THE SAFETY OR PERFORMANCE OF ANY THERMAL ARC PRODUCT.

THIS WARRANTY IS INVALID IF THE PRODUCT IS SOLD BY NON-AUTHORIZED PERSONS.

Except with regards to the products listed below, this warranty shall remain effective three (3) years from the date Thermal Arc's authorized distributor delivers the product to Purchaser, but in no event more than (4) years from the date Thermal Arc delivers the product to the authorized distributor.

Shorter warranty periods apply to the products listed below. On these products, the warranty is effective for the time stated below beginning on the date that the authorized distributor delivers the products to the Purchaser. Notwithstanding the foregoing, in no event shall the warranty period extend more than the time stated plus one year from the date Thermal Arc delivered the product to the authorized distributor.

POWER SUPPLIES	PLASMA WELDING/ VIKING/GENERATORS	INVERTERS	LABOR
MAIN POWER MAGNETICS (STATIC & ROTATING)	3 YEARS	2 YEARS	1 YEAR
ORIGINAL MAIN POWER RECTIFIER	3 YEARS	2 YEARS	1 YEAR
CONTROL PC BOARD	3 YEARS	2 YEARS	1 YEAR
ALL OTHER CIRCUITS AND COMPONENTS INCLUDING BUT NOT LIMITED TO, CONTACTORS, RELAYS, SOLENOIDS, PUMPS, POWER SWITCHING SEMI-CONDUCTORS	1 YEAR	1 YEAR	1 YEAR
ENGINES: ENGINES ARE NOT WARRANTED BY THERMAL ARC, ALTHOUGH MOST ARE WARRANTED BY THE ENGINE MANUFACTURER. SEE THE ENGINE MANUFACTORS WARRANTY FOR DETAILS.			
CONSOLES, CONTROL EQUIPMENT, HEAT EXCHANGES, AND ACCESSORY EQUIPMENT	1 YEAR	1 YEAR	1 YEAR
TORCH AND LEADS	180 DAYS	180 DAYS	180 DAYS
REPAIR/REPLACEMENT PARTS	90 DAYS	90 DAYS	90 DAYS

Warranty repairs or replacement claims under this limited warranty must be submitted to Thermal Arc by an authorized Thermal Arc® repair facility within thirty (30) days of the repair. No transportation costs of any kind will be paid under this warranty. Transportation charges to send products to an authorized warranty repair facility shall be the responsibility of the customer. All returned goods shall be at the customer's risk and expense. This warranty supersedes all previous Thermal Arc warranties.

Effective May 1, 1997

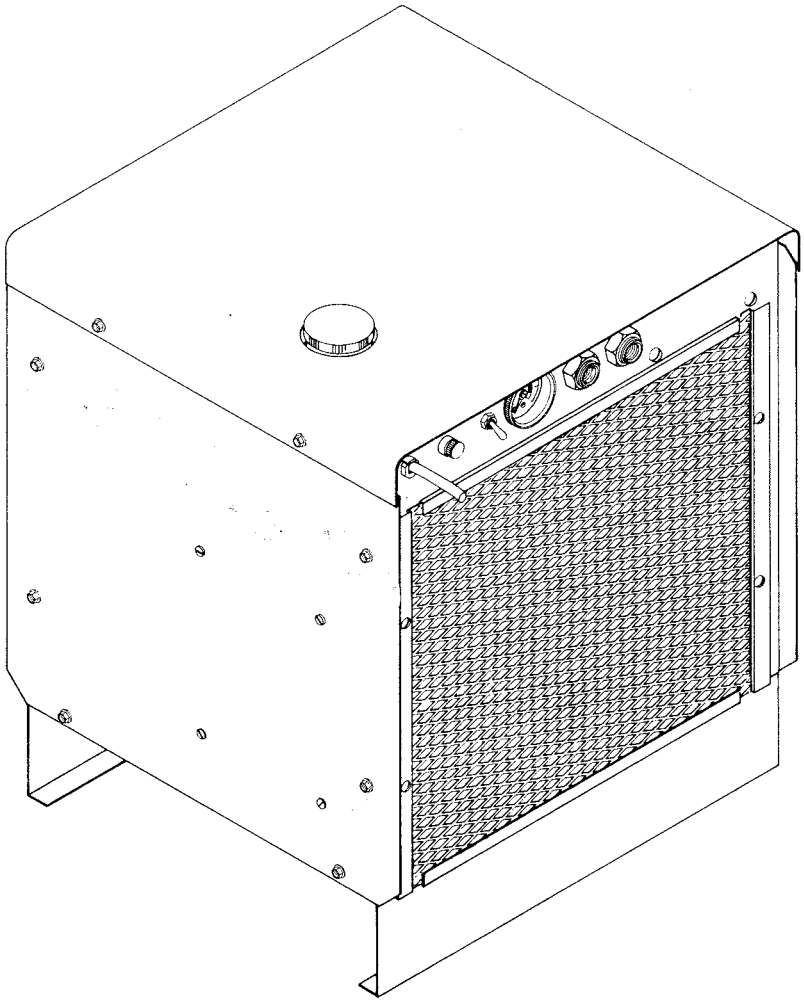

Figure 1-A HE 100A Coolant Recirculator

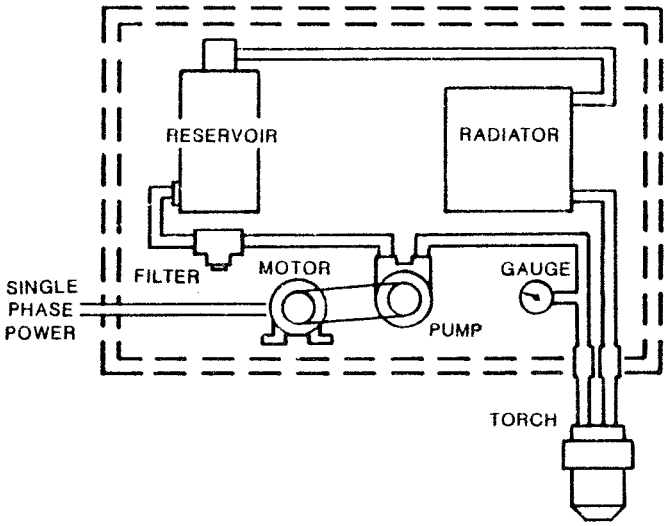

Figure 1-B HE 100A Flow Diagram

1.1. DESCRIPTION OF EQUIPMENT

The HE 100A is a closed loop coolant recirculator used to circulate the torch coolant. It is supplied with a deionizer assembly which maintains the resistivity of the coolant. The unit comes supplied with the following:

- 2 gallons (5.3 liters) of Thermal Arc Torch Coolant.
- Reservoir cap/deionizer cartridge assembly.
- (2) 3/8-1/4 NPT reducer bushings (for SUPPLY and RETURN hose connections).
- (2) Inert B- 1/4 NPT straight adapters (for SUPPLY and RETURN hose connections).

1.2. SPECIFICATIONS

- Power Input: 50 or 60 Hz, 1 phase in one of the following standard voltage/amperage combinations:

  1. 110 volts AC, 60 Hz, 8.6 amps
  2. 220 volts AC, 60 Hz, 4.3 amps
  3. 220 volts AC, 50 Hz, 4.3 amps

- Pump Capacity: 2.3 gpm (8.7 lpm) @ 100 psi (7 Kg/cm^2)
- Capacity: 20,000 BTU/hr (5,043 Kcal/hr)
- Weight: 31 lbs (14.1 kg)

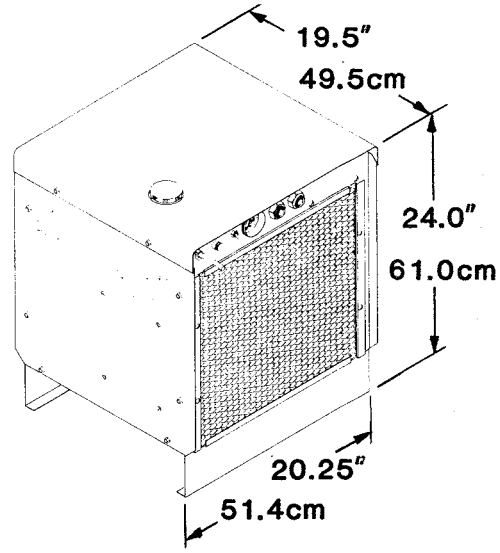

Figure 1-C HE 100A Dimensions

1.3. THEORY OF OPERATION

The main components of the HE 100A Coolant Recirculator are illustrated in the flow diagram (Figure 1-B), and their function is summarized below.

When the main disconnect switch is closed, 1-phase power is supplied to the HE 100A to run the motor. The motor is controlled by the ON/OFF switch on the front panel of the HE 100A. Coolant is pumped through the torch and back to the HE 100A where it flows through the radiator for cooling and then into the reservoir. From the reservoir the coolant travels through the filter and back to the pump and out to the torch again.

2.1. UNPACKING NEW EQUIPMENT

The HE 100A is protected with a carton and padding material to prevent damage during shipment. Remove the packing material and check for any damage that might have occurred during shipping.

A copy of the HE 100A Instruction Manual, in a transparent plastic envelope, is packaged with the unit.

2.2. EQUIPMENT INSTALLATION

Select a clean location with good ventilation and adequate working space. At least 2 feet of clearance should be provided on all sides of the unit to allow for circulation of air to the machine. A source of 1phase power is required.

Check the red tag attached to the input power cable to be sure the 1-phase power that the HE 100A is connected for agrees with the avail able 1-phase power to the unit. If it is necessary to change the voltage, the motor connections must be changed (see the diagram on the inside of the plate that covers the motor connections), and the fuse on the front panel (110V- 15 amp, 220V-8 amp).

CAUTION

Do not run a 50 Hz unit on 60 Hz power or vice versa.

To connect the unit, follow these step by step procedures:

WARNING

Do not turn external power on until Step 8.

1. Check the "supply" and "return" hose connection requirements.

   The SUPPLY (blue dot) and RETURN (orange dot) fittings on the HE 100A have a 3/8 NPT internal thread. Two 3/8-1/4 NPT reducer bushings and two Inert B x 1/4 NPT adapter fittings are supplied with the unit. Make the necessary leak-proof connections for the hoses.

CAUTION

If any additional fittings or connectors are used in the coolant system they must be made of brass or stainless steel. Other materials contaminate the coolant.

2. Connect the supply and return hoses to proper HE 100A fittings.

WARNING

Do not use pipe or metal reinforced hose for this purpose. The fittings in the control console are electrically hot and depend on the hose for insulation.

3. Connect the other end of these hoses to the fittings at their proper location.
4. Remove the (4) hex head screws securing the cover, and remove the cover.
5. Remove the yellow temporary cap from the coolant reservoir and fill with Thermal Arc Coolant to the top of the crosswire in the reservoir neck. Replace the yellow cap temporarily.

CAUTION

Thermal Arc Coolant should always be used. In case the coolant is not available, deionized water with a conductivity above .1 megohm cm can

be used if temperature does not go below freezing.

NOTE:

It is helpful to make a "splash guard" out of the yellow cap by cutting a hole about a 1/2" in diameter in the center of it. Place it back in the top of the reservoir. This will avoid splashing of coolant out of the unit later on when removing air from the system.

6. Check for leaks and loose hose connections. Tighten if necessary.

7. Connect the primary power cable to a suitable source of power as required. Fuse the primary power for 15 amps - 110 volts or 10 amps - 220 volts.

8. Close the external primary power disconnect switch. Switch the ON/OFF switch to ON. The HE 100A should start.

9. Run the HE 100A for several minutes to remove air trapped in the lines. Turn the HE 100A off and remove the yellow cap. Add coolant up to the level of the cross wires inside the reservoir neck, and install the cap/cartridge assembly supplied with the unit. Replace the cover and secure.

10. The unit is now ready for operation.

3.1. PRE-OPERATION SET UP

No pre-operation set up is necessary other than making sure that the coolant is at the proper level in the reservoir. The disconnect switch supplying 1-phase power to the unit must also be closed.

3.2. OPERATION

The HE 100A Coolant Recirculator operates only when the ON/OFF switch on the front panel is activated.

4.1. SERVICE

The coolant level must be maintained at the previously described marker. An occasional blowing out with an air hose will remove any excess dust from the radiator and the inside of the unit. This allows proper air flow through the unit. The filter must also be cleaned regularly.

All fittings should be visually checked to insure that there is no leaking around the connections. If leaking exists, the fittings should be tightened up to stop the leaking or replaced if required.

4.2. COOLANT

The coolant reservoir should be checked daily for coolant level. Thermal Arc Coolant should be used to maintain the coolant level at the cross wires in the reservoir neck. If Thermal Arc Coolant is not available, distilled or deionized water may be used if temperature does not go below freezing. Make sure the resistivity of the water is above .1 megohm cm.

4.3. FILTER

A coolant filter with a reusable screen is located on the upper right hand of the front panel inside the unit. The screen should be removed and cleaned once every six months and/or if torch overheats. To remove the filter screen, remove the front panel screen from the unit and unscrew the hex nut on the bottom of the filter housing. Remove the filter from the housing. The filter can now be cleaned by blowing out with an air hose. If the condition of the filter looks questionable, it should be replaced.

4.4. DEIONIZER CARTRIDGE

The reservoir cap/cartridge assembly includes a small cartridge of deionizing resin to maintain the resistivity of the coolant. The cartridge must be replaced when it changes from gray to straw color.

NOTE:

This cartridge is intended to maintain the coolant resistivity, not to permit the use of tap water in this system. A replacement cartridge is available.

4.5. BELT TENSION

Belt tensions should be such that moderate finger pressure on the belt between pulleys gives about 1/2" deflection. Belt tensions may be adjusted as follows:

1. Remove the cover and front panel fan guard.
2. Loosen the (4) hex stop nuts securing the motor to the base.
3. Slide the motor in the direction away from the pump until proper belt tension is obtained.
4. Secure the motor to the base.
5. Replace the front panel fan guard and cover.

4.6. PUMP

The pump has a pressure relief valve that is factory set at 100 psi. It should not require adjustment. If it does remove the right side panel from the unit. The pressure may be adjusted by turning the adjusting screw located under the acorn nut on

the side of the pump. The acorn nut must be replaced and securely tightened before operating to prevent drawing air into the system.

CAUTION

Do not exceed 100 psi as this will overload the motor.

PUMP REMOVAL

1. Remove the cover.

2. Remove the right side panel.

3. Disconnect the (2) hoses from the pump.

4. Loosen the (4) hex stop nuts securing the motor to the base.

5. Slide the motor until the fan belt can be removed from the pump pulley.

6. Loosen the set screw securing the pulley to the pump shaft and slide the pulley off.

7. Remove the (3) hex bolts securing the pump to the pump mounting bracket. Remove the pump.

PUMP INSTALLATION

1. Remove the two fitting assembies from the pump and install on the new pump. Use teflon sealant tape or pipe sealant on the threads.

2. Mount the pump onto the mounting bracket with the (3) hex bolts and nuts removed.

3. Install the pulley onto the pump shaft aligning the pulley with the motor pulley. Slip the belt onto the pulley.

4. Adjust belt for proper tension by sliding the motor away from the pump until moderate pressure on the belt, between pulleys, give about a 1/2" deflection. Tighten the (4) motor mounting bolts securely.

5. Replace the (2) hoses to the pump fittings. Tighten securely to prevent leaking.

6. Follow steps 8, 9 and 10 in the Installation instructions.

7. Replace the right side panel and secure.

8. Replace the cover and secure.

4.7. MOTOR REPLACEMENT

1. Remove the cover.

2. Remove the front panel fan guard.

3. Remove the fan/motor belt by removing the (4) hex bolts securing the motor to the base.

4. Remove the cover plate from the motor connection box on the rear of the motor. Disconnect the input power leads from the motor leads.

5. Lift the motor up and out through the top of the unit.

6. Remove the fan and pulley from the motor shaft.

MOTOR INSTALLATION

1. Mount the pulley on the new motor shaft. Leave loose until it is aligned with pump pulley.

2. Install the (new) motor onto base. Install the (4) hex nuts removed, but leave loose.

3. Connect the motor leads to the input power leads per the TDC wiring diagram and the diagram on the motor.

4. Line the motor pulley up with the pump pulley and secure to the motor shaft by tightening the set screw.

5. Place the belt around the pump pulley and around the motor pulley.

6. Adjust motor until proper tension on the belt is obtained and secure motor to the base.

7. Replace the fan blade and secure.

8. Replace the side panel, fan guard assembly and cover and secure.

4.8. TROUBLE SHOOTING GUIDE

When the external disconnect switch supplying power to the HE 100A is closed 1-phase power should be present at the ON/OFF switch on the front of the unit. The unit should start to operate when this switch is moved to the ON position. At this time the pump and fan should start rotating and the coolant should be circulating.

TROUBLE	POSSIBLE CAUSE	REMEDY
A. Nothing happens when switch is activated	1. No power to HE 100A	1. Check power source and circuit protectors (fuses)
	2. Blown fuse or open circuit breaker at HE 100A disconnect	2. Replace fuse or reset breaker
B. Primary power circuit protectors keep tripping	1. Motor shorted or seized	1. Check and replace if faulty (see 4.7, page 7)
	2. Pump seized	2. Check pump and replace if faulty (see page 6)
C. Low or no coolant pressure	1. Low coolant level	1. Add more coolant to bring up to level of marker in reservoir
	2. Filter clogged	2. Clean or replace filter screen (see 4.3, page 6)
D. Motor stalls	1. Pressure reading in excess of the 100 psi rating	1. Adjust relief valve (see 4.6, page 6) until correct pressure is obtained
	2. Blockage in the coolant line	2. Locate blockage and correct the cause
E. Coolant leaking from HE 100A	1. Check all hose connections for leaks	1. Tighten connection or replace fitting if necessary

PARTS LIST

5.1 GENERAL ARRANGEMENT

ASSEMBLY PARTS LIST

The Assembly Parts List consists of illustrated Parts Lists of the following:

Figure 5-1. HE 100A Coolant Recirculator
Figure 5-2. Front Panel Assembly
Figure 5-3. Base Assembly
Figure 5-4. Left Side Panel Assembly
Figure 5-5. Rear Panel Assembly

NUMERICAL INDEX

The Numerical Index lists in numerical order all catalog numbers listed in the Assembly Parts List and the applicable figure and index number for cross reference.

ORDERING INFORMATION

When ordering replacement parts, order by catalog number and complete description of the part or assembly, as given in the description column

of the Assembly Parts List. In addition, give the model number of the machine, the machine serial number, and its operating voltages, as given on the plate attached to

the front panel of the power supply and control unit. Address all inquiries to your authorized Thermal Arc distributor.

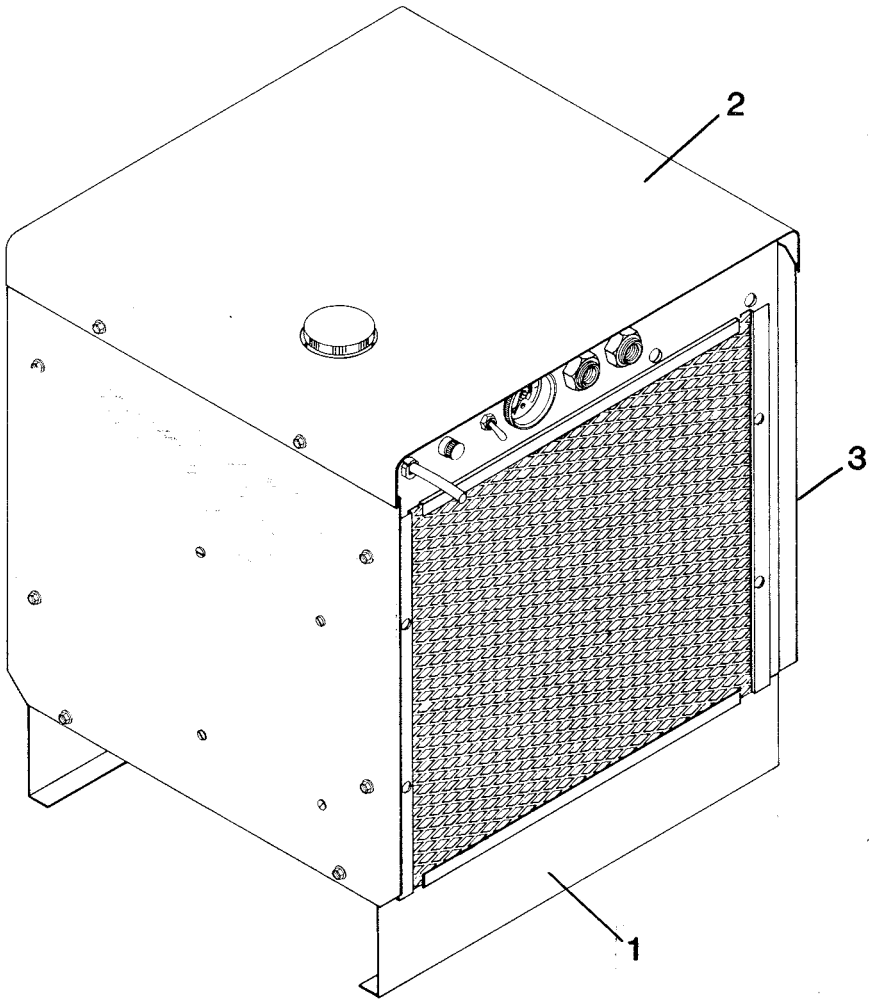

Figure 5-1 HE 100A Coolant Recirculator

Fig.	Item No.	Qty.	Catalog Number	Description
5-1	1	1	7-3011-1	HE 100A Coolant Recirculator-60 Hz, 110 V
5-1		1	7-3011-2	HE 100A Coolant Recirculator-60 Hz, 220 V
5-1		1	7-3011-3	HE 100A Coolant Recirculator-50 Hz, 220 V
5-1	2	1	9-4265	Cover- Red
5-1	3	1	9-4261	Right Side Panel- Red

PARTS LIST

Figure 5-2 Front Panel Components

Fig.	Item No.	Qty.	Catalog Number	Description
5-2	1	1	9-4263	Front Panel
5-2	2	1	9-4260	Front Panel Screen
5-2	3	1	9-3503	Input Power Cable w/o Plug
5-2	4	1	9-4252	Strain Relief
5-2	5	1	9-2936	Fuse Holder
5-2	6	1	9-2987	Fuse- 15A (110V)
5-2	6	1	9-5977	Fuse- 8A (220V)
5-2	7	1	9-2850	Pressure Gauge
5-2	8	2	9-3078	3/8 NPT Bulkhead
5-2	9	1		Filter Mounting Bracket
5-2	10	1	8-1032	Filter
5-2		1	8-1002	Filter Screen
5-2	11	1		Filter Clamp
5-2	12	2	8-0346	#8 JIC-3/8 NPT 90@ Adapter
5-2	13	1	9-2984	1/8 NPT Coupling
5-2	14	1	9-3325	Toggle Switch- SPST
5-2	15	1	9-2856	1/8 NPT Snubber
5-2	16	1	8-0348	#6 JIC-3/8 NPT Straight Adapter
5-2	17	1	9-2384	3/8 NPT Close Nipple
5-2	18	1	9-2385	3/8 NPT Tee
5-2	19	1	8-1422	3/8-1/4 NPT Reducer
5-2	20	1	8-0258	#4 JIC-1/4 NPT Straight Adapter
5-2	21	1	9-4253	#8 JIC-3/8 NPT 45@ Adapter
5-2		1	9-4255	#4 Hose (Gauge to Supply)
5-2		1	9-4257	#6 Hose (Return to Radiator- bottom)
5-2		1	9-4256	#6 Hose (Reservoir to Radiator- Top)
5-2		1	9-4259	#8 Hose (Reservoir to Filter)
5-2		1	9-4258	#8 Hose (Filter to Pump)
5-2		1	9-4258	#8 Hose (Pump to Supply)

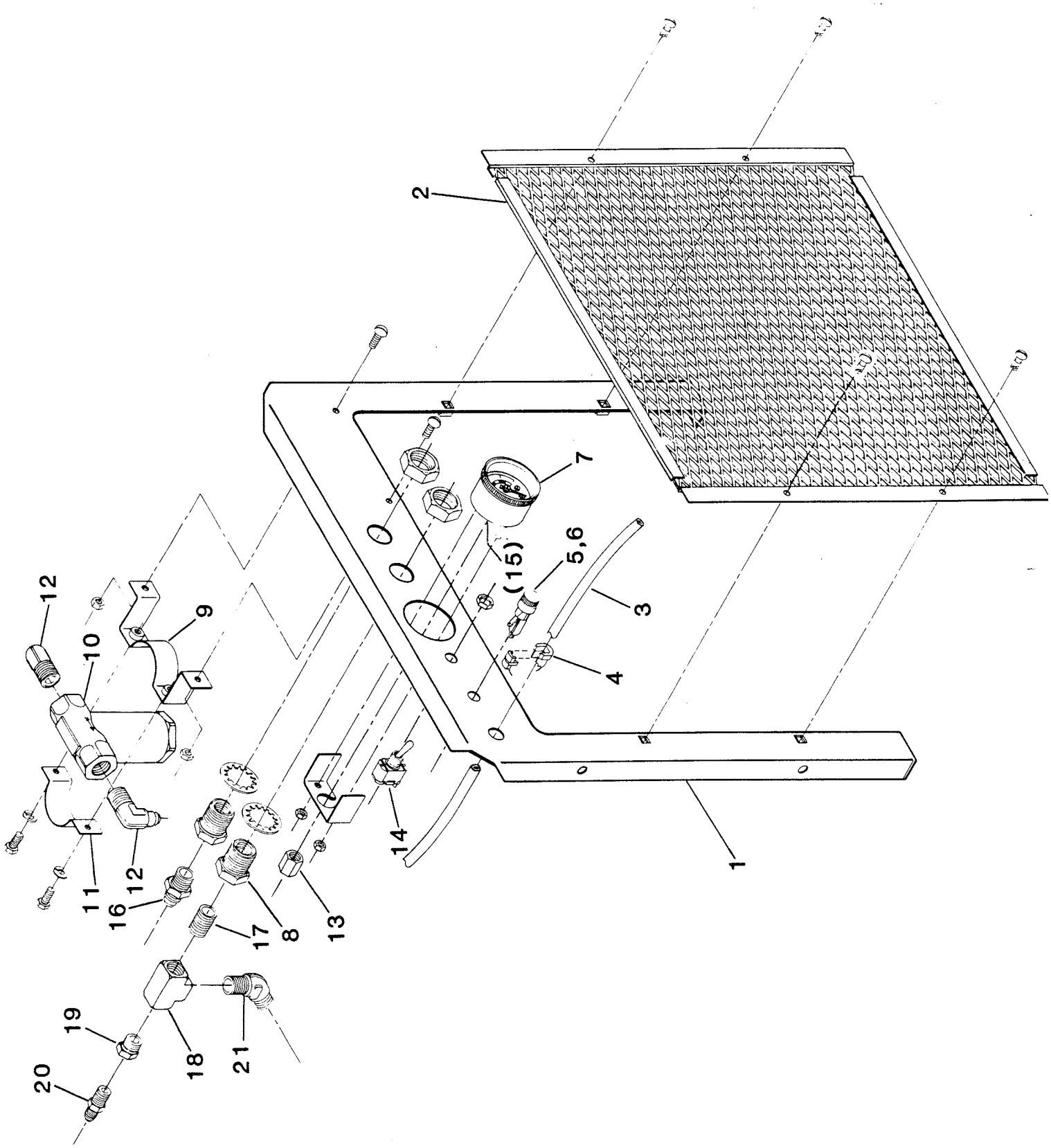

Figure 5-2 Front Panel Components

Figure 5-3 Base Assembly

Fig.	Item No.	Qty.	Catalog Number	Description
5-3	1	1		Base
5-3	2	1		Motor Mounting Bracket
5-3	3	1		Pump Mounting Bracket
5-3	4	1	8-1328	Pump
5-3	5	2	8-0353	1/2-3/8 NPT Reducer
5-3	6	2	8-1251	#8 JIC-3/8 NPT Straight Adapter
5-3	7	1	8-1458	Pulley Bushing
5-3	8	1	8-1346	Pulley (Pump)
5-3	9	1	9-3497	Belt- 26" (60 Hz)
5-3	9	1	9-2468	Belt- 27" (50 Hz)
5-3	10	1	9-3498	Fan Blade
5-3	11	1	8-1486	Pulley- (Motor, 60 Hz)
5-3	11	1	9-5569	Pulley- (Motor, 50 Hz)
5-3	12	1	9-3496	Motor- 110/220V, 50/60 Hz, 1-Ph

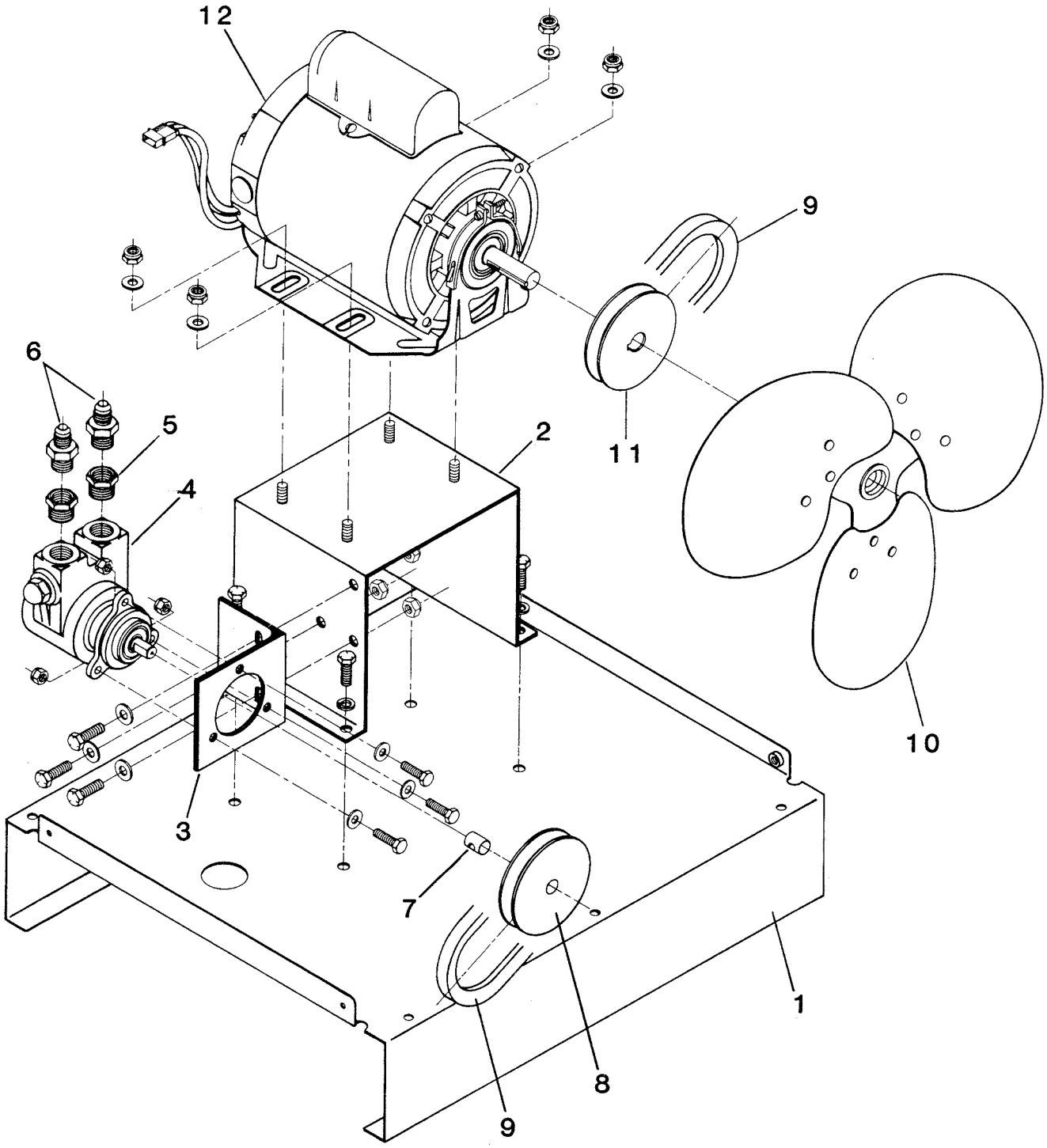

Figure 5-3 Base Assembly

PARTS LIST

Figure 5-4 Left Side Panel Assembly

Fig.	Item No.	Qty.	Catalog Number	Description
5-4	1	1	9-4262	Left Side Panel- Red
5-4	2	1	9-3499	Reservoir Assembly
5-4	3	1	8-0346	#8 JIC-3/8 NPT 90° Adapter
5-4	4	1	9-4254	#6 JIC-3/8 NPT Straight Adapter with Orifice
5-4	5	1	9-3523	Cap and Cartridge Assembly
5-4	(6)	1	9-3597	Hanger- Locking Reservoir Cap
5-4	7	1	9-2360	C5 Cartridge Boot
5-4	8	1	9-3595	Reservoir Cap
5-4	9	1	9-2225	Deionizer Cartridge
5-4	10	1	9-2219	Cartridge with Boot
5-4	11	1	9-3535	Sponge

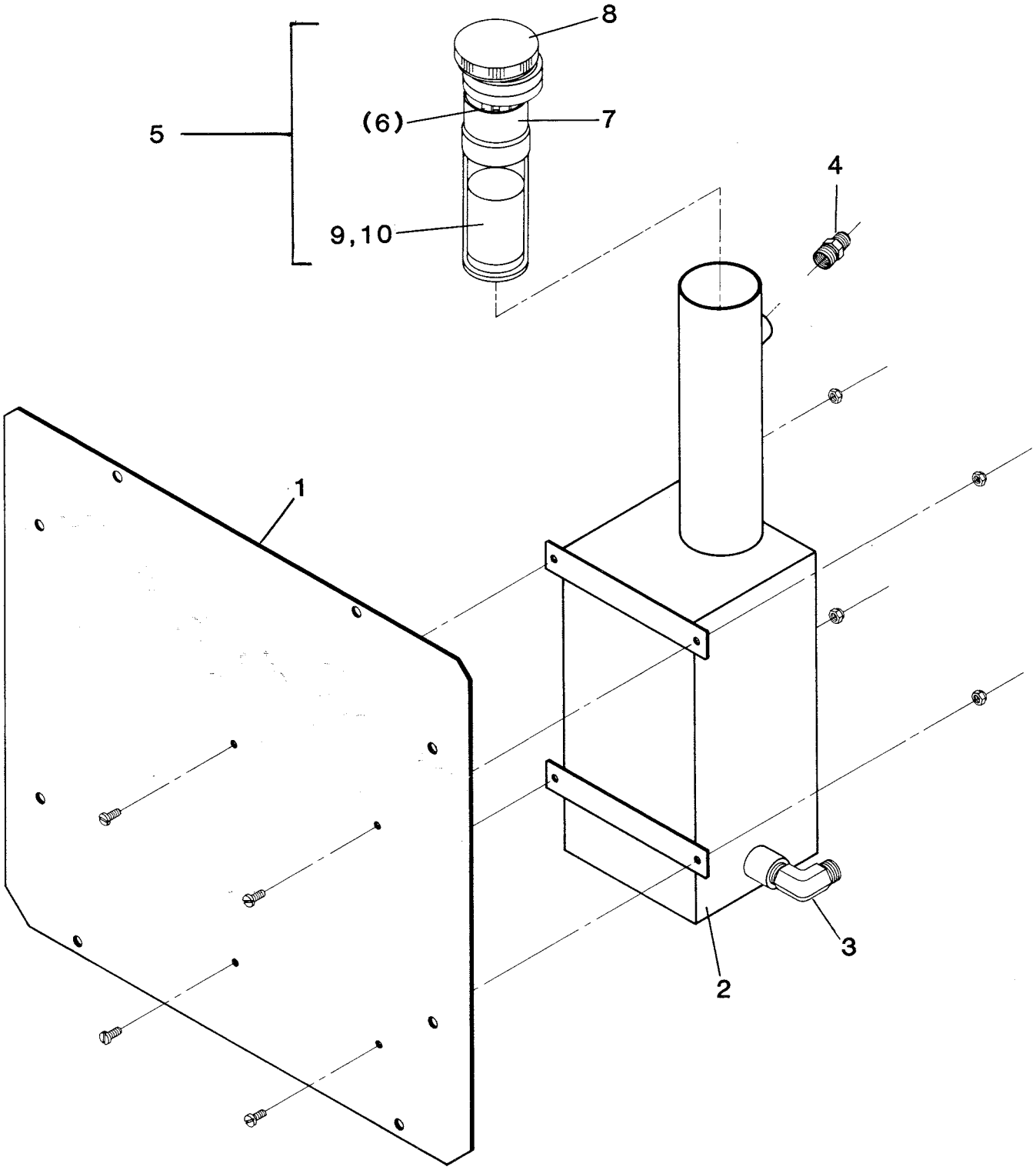

Figure 5-4 Left Side Panel Assembly

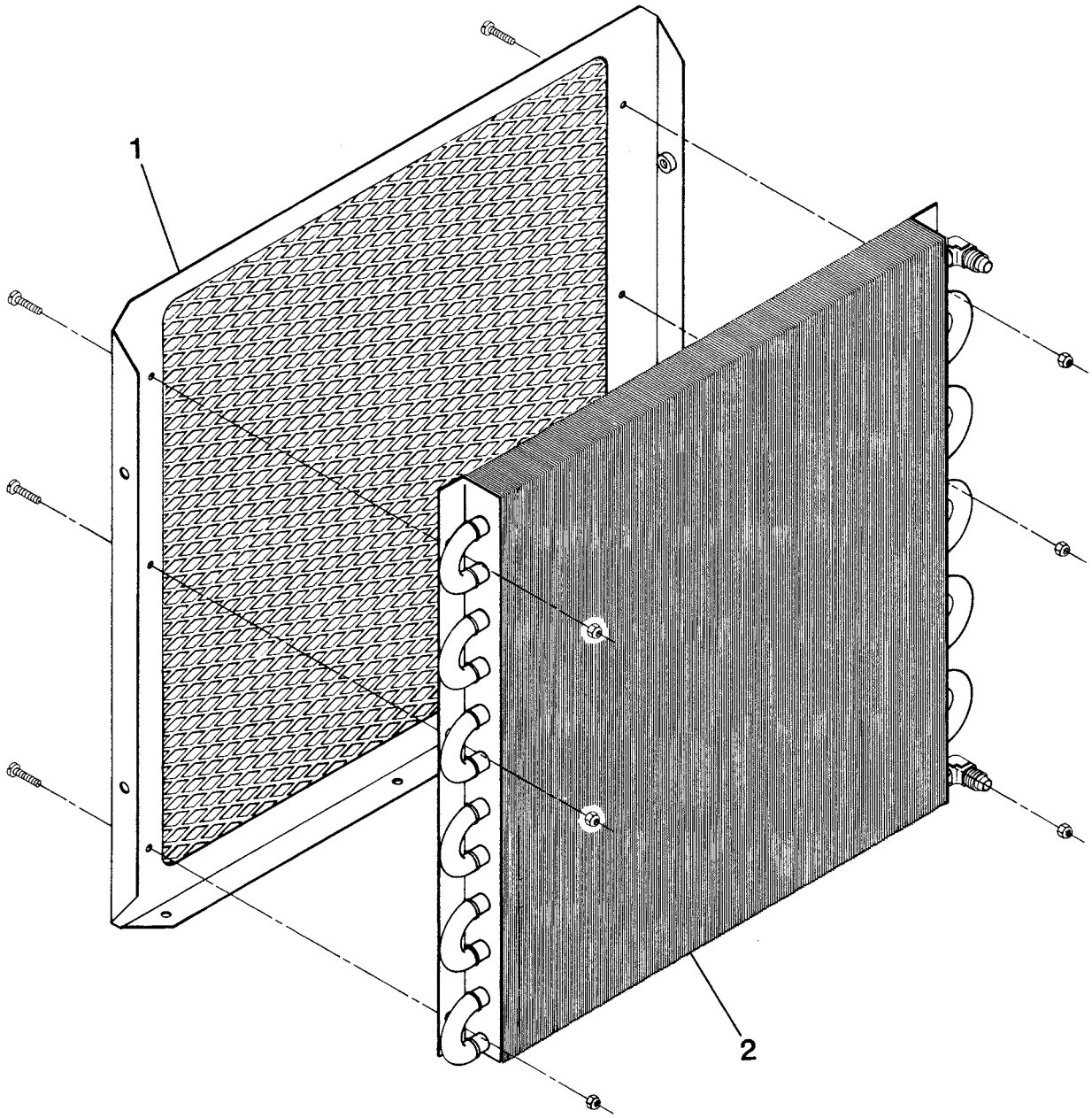

Figure 5-5 Rear Panel Assembly

Fig.	Item No.	Qty.	Catalog Number	Description
5-5	1	1	9-4264	Rear Panel
5-5	2	1	8-1347	Radiator

5.2. NUMERICAL INDEX