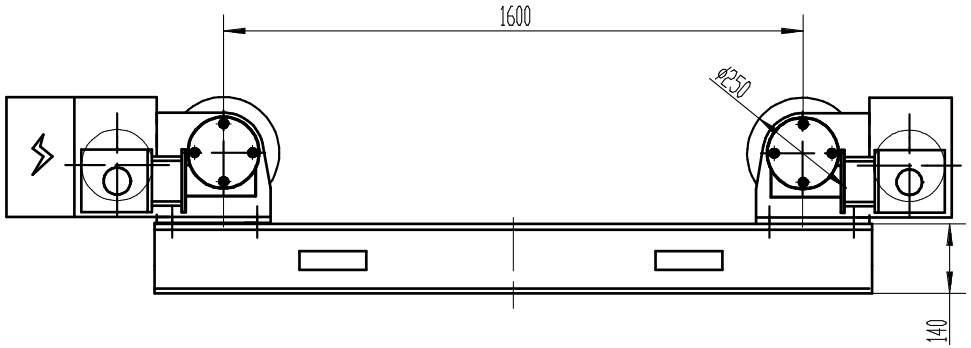


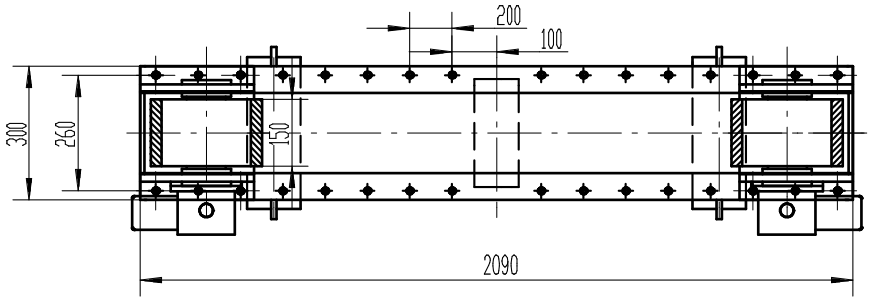


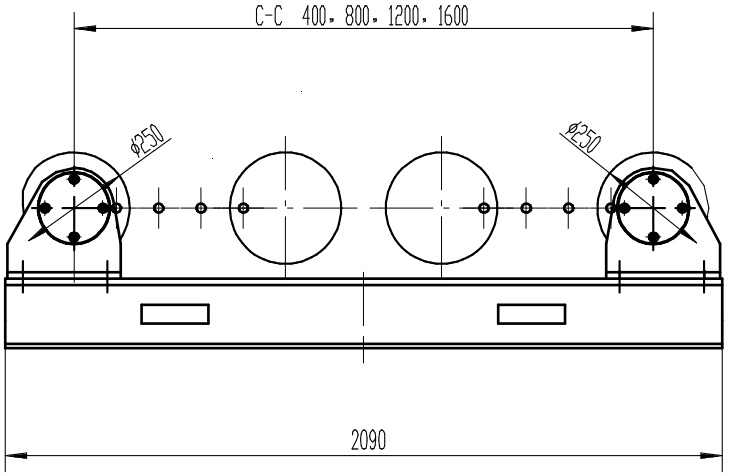


| | |
|---|---|
| Model | CR- 5 Welding Roller |
| Turning Capacity | 5 tons maximum |
| Loading Capacity-Drive | 2.5 tons maximum |
| Loading Capacity-Idler | 2.5 tons maximum |
| Vessel size | 250~3500mm |
| Adjust Way | Bolt adjustment |
| Motor Rotation Power | 2*0.37 KW |
| Rotation Speed | 100-1000mm/min |
| Speed control | Variable frequency driver |
| Roller wheels | Steel coated with **PU** type |
| Roller size | Ø250*150mm |
| Voltage | 380V±10% 50Hz 3Phase |
| Control system | Remote control 8m cable |
| Color | RAL 3003 RED+9005 Black |

**Customer Approval**

| | | |
|---|---|---|
| Westermans International Ltd together we weld the world... | | **Welding Rollers** |
| Drawing by | P.H | **CR - 5** |
| Check by | S.G | Bolt adjustment |
| Revision | | 001 |
| Drawing No. | | WS 2006FCR5 |
| Email | | |