600 SERIES
SPLIT-FRAME CLAMSHELLS



TRI TOOL
BUILDING PERFORMANCE

Every day, industries around the world use portable Tri Tool® OD mounted Clamshells to provide rapid, dependable, precision machining for countless pipe cutting applications.



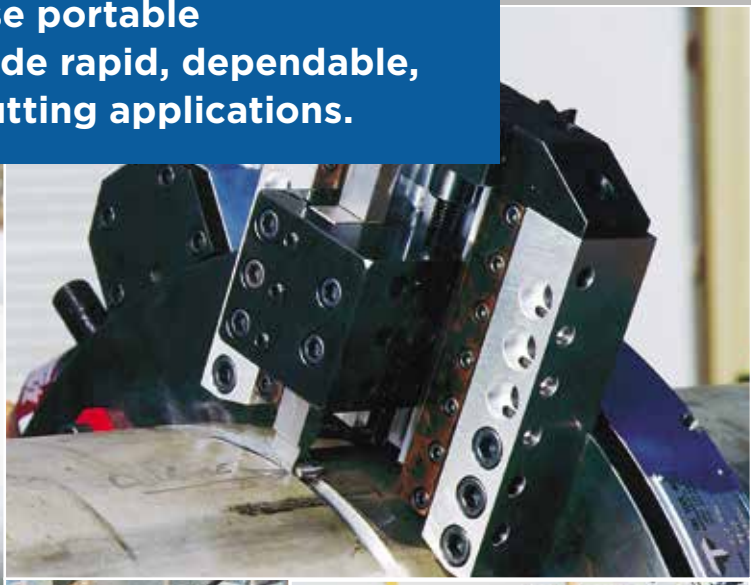













Tri Tool's reputation has been built on the precision, durability and overall quality of our equipment, so you can trust that you are using the best tool for your specific challenge. Our 600 Series SB and RBL Clamshells are engineered to handle any application; any pipe size or material and our machine tool experts are available to ensure you get the right equipment to fit your needs.

- ***Best-In-Class Precision***
- ***Designed for Maximum Durability***
- ***Both In-Line and End Prep Versatility***
- ***Cold Cutting - No Heat Affected Zone***
- ***Rapid, Dependable Performance***
- ***A Comprehensive Range of Accessories***

Tri Tool Clamshells produce superior results, able to deliver exacting diameter and surface tolerances within thousandths of an inch, making them ideal for use with advanced orbital welding systems.

Clamshells can simplify the processes of cutting to length and weld end preparation by performing both operations simultaneously.

Easy to setup and operate, Tri Tool 600 Series Clamshells offer reduced labor and time requirements for pipe and component replacement, the perfect solution for plant maintenance where downtime is a critical economic issue.

Tri Tool's unique Clamshell bit designs allow for optimal machining speed and feed rates. A simple, reliable feed control system provides the flexibility to perfectly match the cut depth for any material.

Designed specifically to operate in areas of tight clearances, these machines provide features that permit them to machine pipe in a wide variety of situations where no other equipment can be used.

Because Clamshells use cold cutting methods, they can be used in controlled environments where OD Mounted Flame Cutters are unacceptable.

Clamshells can be operated by remote control, making them perfectly suited for machining operations in nuclear, explosive, toxic, underwater and other hazardous environments.

Tool blocks are heat-treated for durability and parts that could be damaged, such as gears, pins, and bearings, are protected to reduce the chance of accidental damage. Gears are fully covered to provide increased operator safety.

When your work demands ultimate precision and durability in in-line/end-prep equipment, choose Tri Tool 600 Series Clamshells for guaranteed performance.

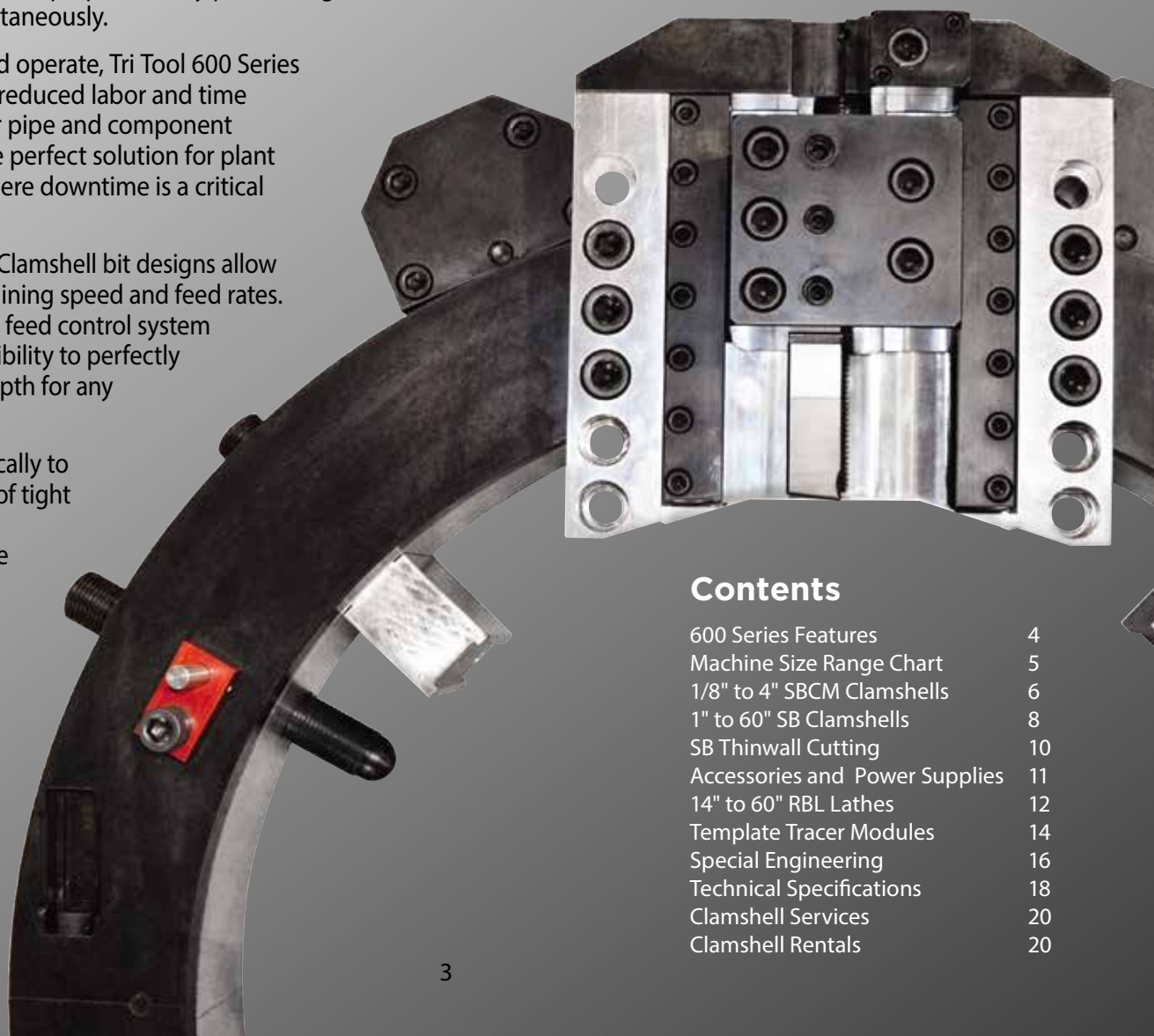

Contents

600 Series Features	4
Machine Size Range Chart	5
1/8" to 4" SBCM Clamshells	6
1" to 60" SB Clamshells	8
SB Thinwall Cutting	10
Accessories and Power Supplies	11
14" to 60" RBL Lathes	12
Template Tracer Modules	14
Special Engineering	16
Technical Specifications	18
Clamshell Services	20
Clamshell Rentals	20

600 Series Features

Through innovative design, each of the versatile SBCM, SB and RBL lathes offer unique advantages.

Tri Tool 600 Series clamshell lathes are manufactured in three types, the SBCM, SB and RBL. The different types, and wide range of models, cover the full range of standard pipe sizes and wall thicknesses. Tri Tool can provide an optimal cutting configuration with benefits uniquely suited to your specific work requirements.

SBCM Series

Tri Tool's lineup of lathes begins with the outstanding precision of the SBCM (Sliding Bearing Collet Mounted) lathes. Designed to operate on 1/8" pipe to 4" tube the SBCM series offers accurate and secure, self centering collet-type clamping that protects smaller pipe and tube from distortion or damage due to clamping forces.

SB Series

The venerable SB (Sliding Bearing) lathes feature adjustable full-contact bearings for maximum strength, providing the ultimate solution for simultaneous severing and beveling, deep counterbores, and close tolerance machining. The signature sliding bronze bearings provide maximum stability for a smooth finish, precision machining, and long tool bit life, even on the most demanding materials. In harsh or contaminated environments such as offshore oil platforms or nuclear power plants, sliding bearings can be easily and economically cleaned and adjusted, maintaining consistent operating performance. Standard tool modules for the SB Series require minimal radial clearance, important when working where space is limited. A vast array of accessories are available for cutting extra heavy-wall pipe, as well as a wide range of specialized uses.

RBL Series

The RBL (Roller Bearing) Series clamshells utilize adjustable vee-track bearings, ideal for machining applications where maximum portability through reduced weight and size are prime considerations. The reduced-friction and drag of the roller bearings result in more power focused on the cut for faster operation. Requiring less input power, most RBL machines can operate efficiently with a single drive motor. An optional second drive motor can be used to provide additional horsepower when required. The RBL's lightweight design provides easier setup and handling. Long-travel tool modules with worm drive permit smooth tool feed and offer a wide pipe size cutting range. Mounting points for up to three tripper assemblies provide maximum allowable tool feed for different materials, reducing the required cutting time. Tool modules and machining accessories are also available for heavy-wall cutting.

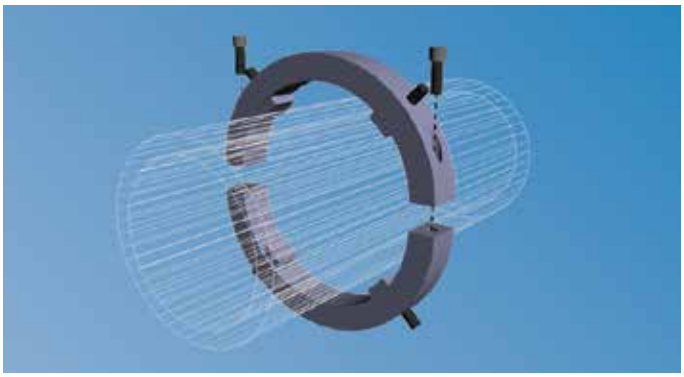

The split-frame design of the Clamshell lathe allows the machine to separate and mount around the OD of in-line pipe or fittings for strong, stable clamping.



A 600 Series SB Clamshell performing a precision deep counterbore, critical to a pipe end-matching operation on an Oil and Gas Pipeline project.

Special Applications

As a precision rotating platform, the clamshell lathe can be configured for many in-place machining operations along with severing and beveling such as socket weld removal, counterboring, and single-point machining.

SB, SBM and SBCM Clamshells are used to salvage welded fittings and perform seal weld cutting between pipe and bulkheads in situations with sufficient mounting space. For socket weld removal, adjustable clamp pads center the clamshell with the tool bit positioned over the socket weld. An auto-feed tool module feeds the bit radially and machine the weld fillet back to the socket face.

600 SERIES MACHINE SIZE RANGE CHART

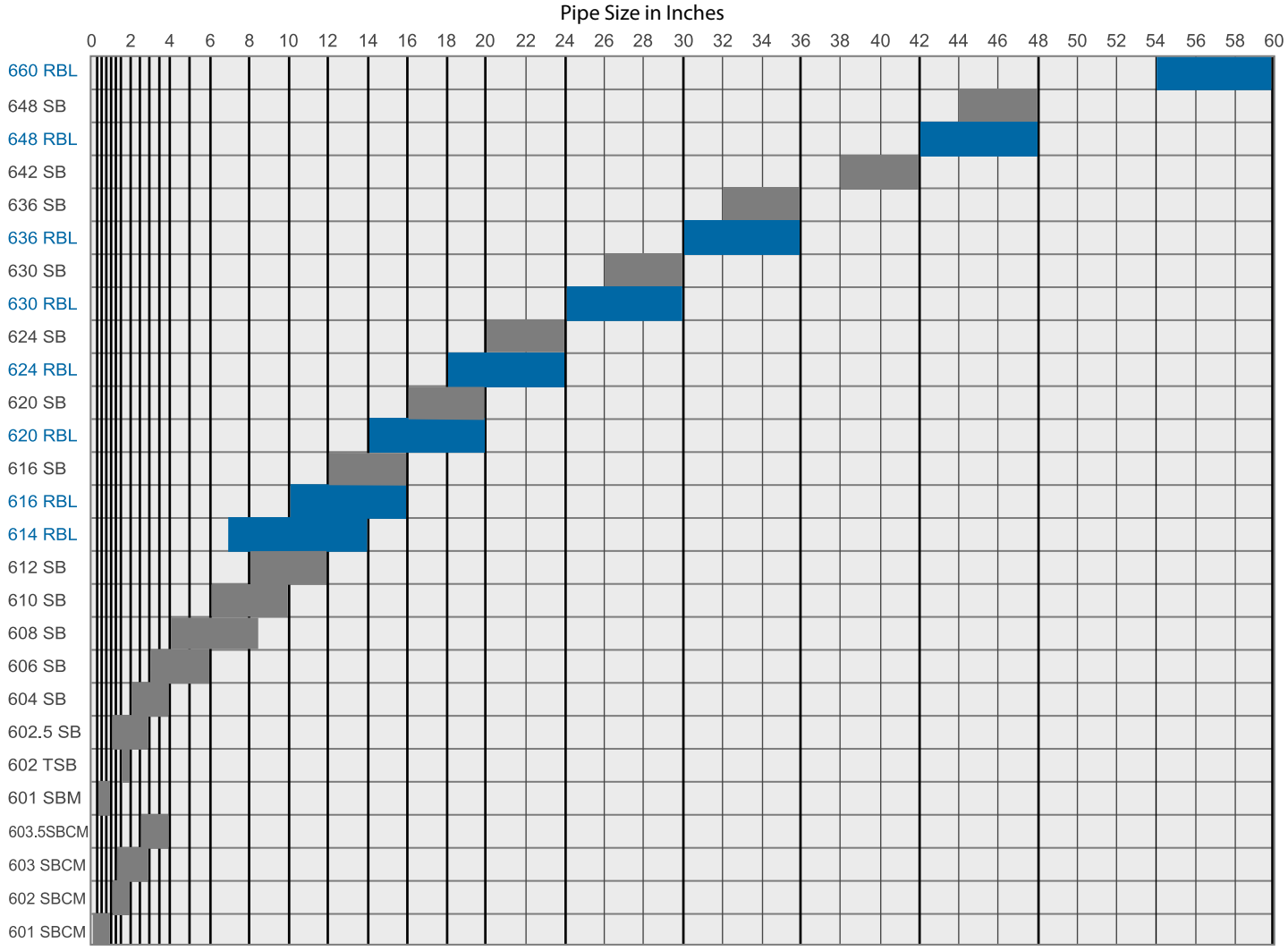

This graph illustrates the pipe size mounting ranges for Tri Tool split frame lathes. When using optional or custom accessories with SB and RBL Series lathes, cutting ranges may be expanded to include smaller pipe sizes than those shown. For more info, refer to the (SB and RBL) System Component Chart on Page 13 of this brochure or call Tri Tool.

Counterbore modules enable machining the inside wall of a pipe end. Because it can immediately follow a cut without machine repositioning or modification, these modules can consistently provide a uniform bore perpendicular and concentric to the cut line. Radial feed is infinitely adjustable within a machine's cutting range.

An additional feature of the CBM-3 counterbore module is a taper boring adjustment for 0° to 30° chamfers or lead-out angles following a counterboring operation.
This option enables the clamshell to perform single-point machining which is ideal for heavy-wall applications that require a reduced chip load. Typical uses are facing, beveling, grooving, and counterboring large diameter pipe, as well as resurfacing flange faces. A slide assembly mounts onto the rotating headstock and provides infinitely adjustable bevel angles from 0° to 90°. The operator can select from eight feed rate settings to fit any cutting application.

Reliable, Precise Counterbores

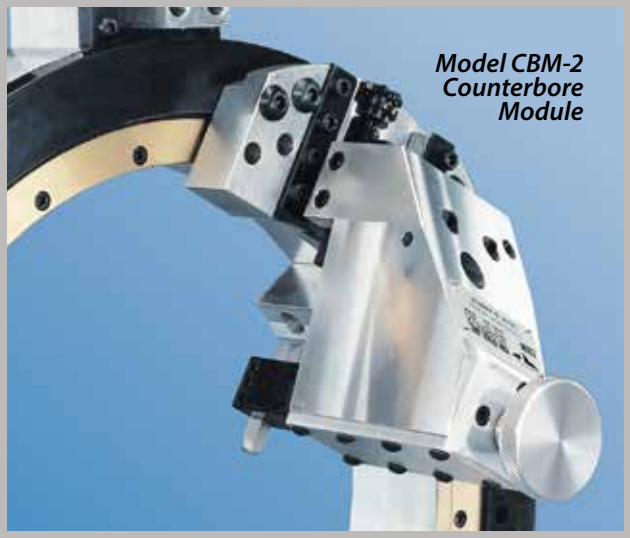

The Counterbore Module's capability for precision counterbores without changing machines (while the Clamshell is still in perfect alignment to the cut) is a significant advantage.

SBCM Collet Lathes

Small In Size, But Big On Precision

Model 602 SBCM

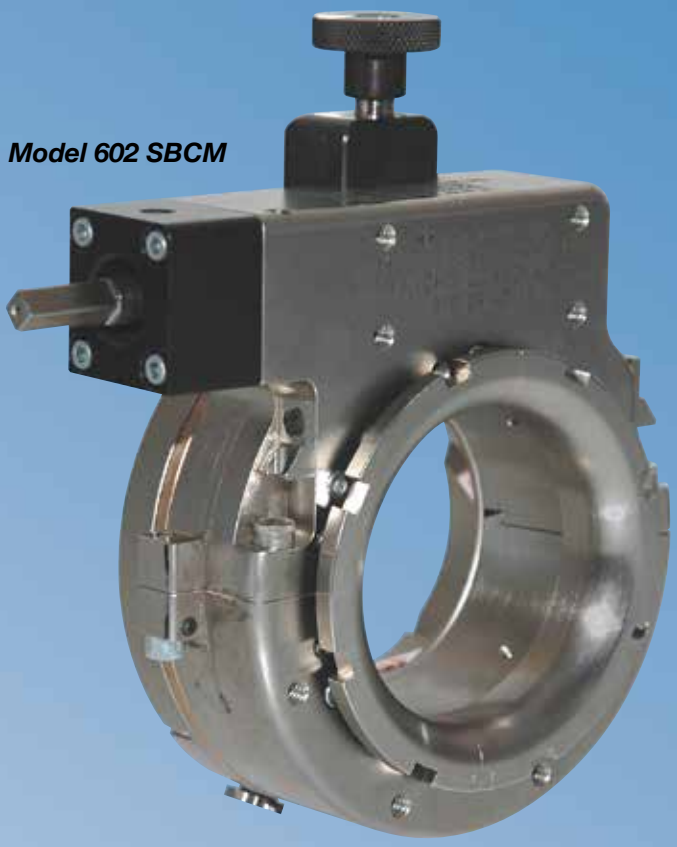



- Collet mounting - prevents deforming thin wall pipe & tube
- Simple, precise in-line cutting
- Sever and prep in one step
- Compact design - perfect for low radial profile operation
- Flexible drive shaft option with quick detach bayonet mount
- The perfect machining solution for field tie-ins

Model 601 SBCM (1/8″ to 1″ Pipe)
Model 602 SBCM (1″ to 2″ Pipe)
Model 603 SBCM (1.25″ Pipe to 3″ Tube)
Model 603.5 SBCM (2.5″ Pipe to 4″ Tube)



The Flex Drive Shaft System

The precision SBCM Series of in-line cutters has been designed to operate with the Flex Drive system that enables the tool to operate with maximum flexibility. Perfect for tight, confined spaces, the Flex Drive attaches by means of a quick-detachable bayonet lug connector for rapid and secure set-up and ease of use.

SBCM Series low profile split-frame collet type lathes are excellent for precision tube and pipe severing and beveling in tight spaces.

These unique lathes have the capability to split in two for mounting on either side of in-line 1/8" pipe to 4" tube in order to perform precision severing and/or beveling.

The SBCM Series offers secure collet type clamping that provides not only self-centering, but also protects the work from distortion or damage from clamping forces. They are protected by a tough Nickel plating that makes them easy to clean and decontaminate. Their design requires only a short perch length for operation, and are sized to cover a wide range of cutting applications. Bits can be specified to provide optimal cutting results on specific materials. With the ability to efficiently combine different end finishing operations, the SBCM ensures that you get reliable, repeatable results, each and every time.



In this video-capture, an SBCM clamshell has just completed the severing of a training coupon. This machine had been configured for a sequential sever and bevel operation. You can see the topmost bit has completed the sever and the severed end is falling away. The bit at the bottom is in the process of generating the bevel to the specified depth.

Model	*Model Specific Module*	*Socket Weld Removal Kit*	*Single Pneumatic Drive*	*Electric (DC) Drive*	*Auto Disengage Tool Module Kit*
601 SBCM	●	●	●	○	○
602 SBCM	●	●	●	○	○
603 SBCM	●	●	●	○	○
603.5 SBCM	●	●	●	○	○

● *Standard* ○ *Special*

(Model 602 SBCM Shown)

① Drive housing
② Split Line
③ Drive Input
④ Tripper Assy.
⑤ Collet
⑥ Tool Holder
⑦ Tool Bit

Notes:
A. Please refer to the operator's manual and/or technical specifications.
B. Some listed specifications may refer to specific configurations, pipe schedules or material types.

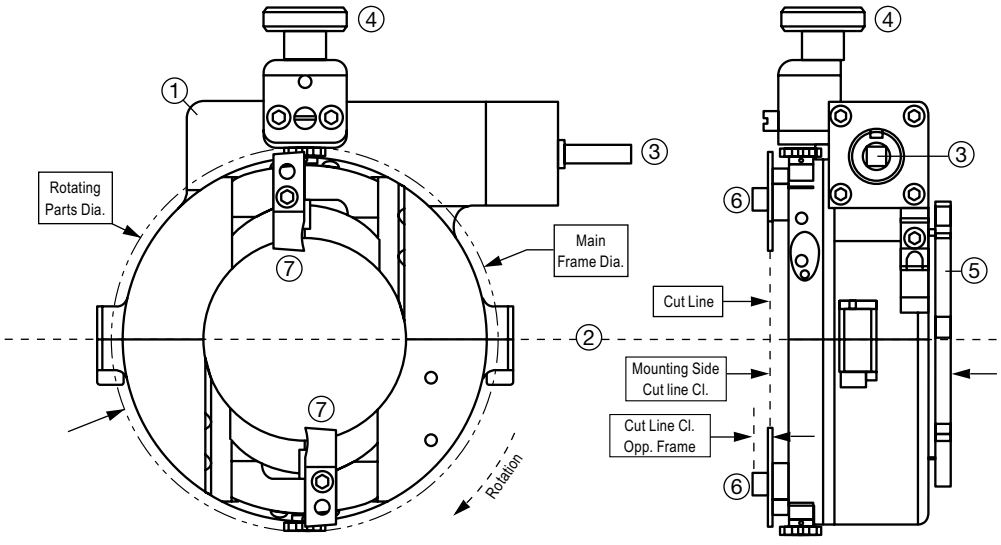

Model	Pipe Size Range	Mounting Range	Rotating Parts Diameter	Main Frame Diameter	Max Wall Thickness (w/ special procedures)	Cut Line Clearance (Mounting Side)	Cut Line Clearance (Opposite Frame)	Machine Weight
	Inch (mm)	Inch (mm)	Inch (mm)	Inch (mm)	Inch (mm)	Inch (mm)	Inch (mm)	Lbs. (kg)
601 SBCM	1/8 (10.3) - 1 (33.4)	.405 (10.3) - 1.31 (33.4)	3.45 (87.6)	3.25 (82.6)	.358 (9.09)	2.24 (56.9)	.25 (6.35)	4.0 (1.81)
602 SBCM	1 (33.4) - 2 (60.3)	1.31 (33.4) - 2.37 (60.3)	4.61 (117.1)	4.40 (111.8)	.358 (9.09)	2.24 (56.9)	.25 (6.35)	6.0 (2.67)
603 SBCM	1 1/4 (42.16) - 3" Tube	1.66 (42.16) - 3.0 (76.2)	5.25 (133.4)	5.03 (127.8)	.358 (9.09)	2.19 (55.0)	.25 (6.35)	6.2 (2.81)
603.5 SBCM	2 1/2 (73.02) - 4" Tube	2.875 (73) - 4.0 (101.6)	6.23 (158.3)	6.03 (153.2)	.358 (9.09)	2.67 (67.9)	.25 (6.35)	8.7 (3.95)

THIS INFORMATION IS PROVIDED AS A GUIDELINE ONLY TO ASSIST WITH THE SELECTION OF EQUIPMENT AND ACCESSORIES. THIS INFORMATION IS SUBJECT TO CHANGE WITHOUT NOTICE. CONTACT YOUR SALES REPRESENTATIVE FOR SPECIFIC DETAILS OR TECHNICAL SPECIFICATIONS.

1" to 60" SB Clamshells

Portable Machine Shop Precision



Model 612SB

Model 606SB

Model 601SBM

The split-frame SB lathes offer the precision and power to sever and bevel a wide range of pipe sizes in the most demanding applications.

The Model SB series lathes are designed for severing and beveling of pipe from 1" through 60" and offer tool modules and accessories for a wide range of cutting operations from OD Tracking modules to complex, heavy-wall single-point machining. The large SB clamshells produce otherwise unattainable levels of accuracy and control, critical to pipe welding operations in heavy industry and power production. Because of the clamshell's power and superior stability, it is ideal for new construction, in-place maintenance, component replacement, decommissioning and production.

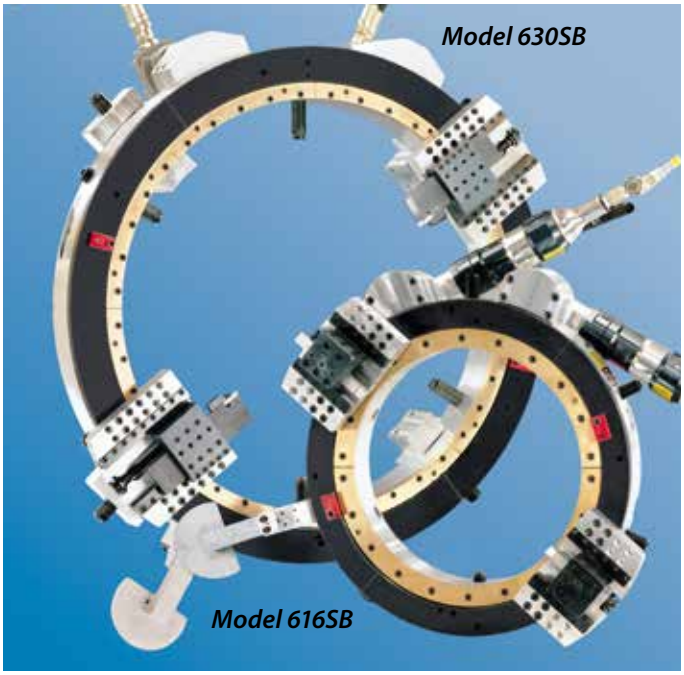

SB Features:

- New, updated tripper for operator safety
- Simultaneously sever and bevel on thin or heavy-wall pipe
- Numerous drive options
- Adjustable OD mounting system featuring locator pads & jackscrews for maximum stability
- Excellent for working in tight spaces with little clearance
- Extendable capabilities with additional machining accessories



While most often used in a portable role, clamshells are extremely effective in fabrication shops where high volume, precise severs, bevels and end preps are needed. The above Clamshell is shown performing a simultaneous sever/bevel operation on titanium pipe.

The 3 Position Tool Holder Increases Cut Range for 6 - 12" SB Clamshells



The 3 Position Tool Holder mounting bolts (shown) can be mounted in one of the three positions to shift the module in or out to accommodate different pipe sizes.

Tri Tool now produces a tool holder for use with the Model 606 through 612 SB Clamshell that permits cutting on pipe that is one size smaller than before. The 3 Position Tool Holder is now standard with new 606SB through 612SB Clamshells, and is available as optional accessory for customers with existing SB clamshells in that range.

SB Model	Previous Pipe Size Range	Range With 3 Position Tool Module
606 SB	4" to 6"	2" to 6"
608 SB	6" to 8"	4" to 8"
612 SB	10" to 12"	8" to 12"

SB Thin-wall Cutting

The versatility of Tri Tool's 600 Series SB Clamshells is demonstrated by the precision severing that can be achieved for exacting thin-wall applications.

The smooth, precision cutting characteristics of the SB Clamshell are ideal for severing and beveling of thinner wall of Sched 5 to 10 pipe and tube, making them perfect for use in the semiconductor , pharmaceutical, chemical, and food processing industries.

Proper cutting of a typical .062" to .250" wall requires some specialized accessories to prevent deformation created by clamping forces of mounting pads. Other considerations are tracking the OD and rounding methods, all designed to produce a consistent land thickness and profile.

Mounting pads are size specific for the pipe or tube being worked on and pad sets are typically aluminum but can be made from different materials (such as stainless steel or plastic) depending on requirements.

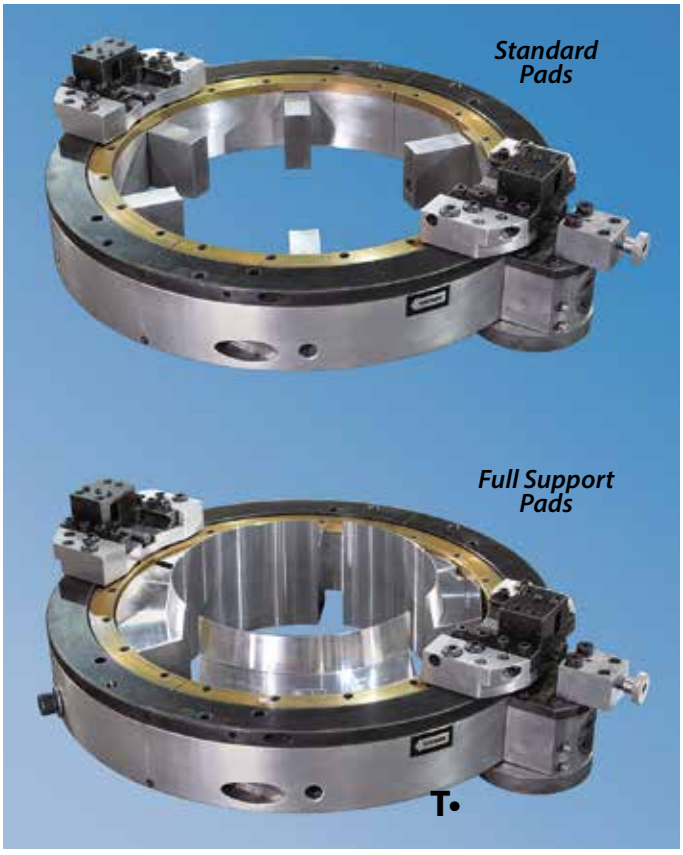

In the 612SB Clamshell shown above, the increased surface area of Full Support Pads is clearly seen. While conventional Clamshell mounting pads provide secure grip on regular to heavy wall pipe, they can focus strong clamping forces that could distort and deform thinner wall thicknesses.



A piping system contractor performing outage maintenance on thin-wall stainless piping system uses an electrically powered SB clamshell fitted with full support pads. The piping system was part of an auxiliary high purity nitrogen supply line at a semiconductor manufacturing facility. A prefabricated pipe assembly was then orbitally welded in place without any additional end-prep being required.

Full Support Pads

Clamshells use full support pad sets for severing and beveling thin-wall pipe and tube. Full Support Pads provide excellent distribution of clamping forces.

Full support pads can be utilized for pipe sizes up to 1" less than a Clamshell model's maximum mounting specification. Full support pads spread the mounting forces equally over a much larger area, protecting thin-wall pipe from warping or distortion, providing a secure grip, and helping to reshape out-of-round conditions.

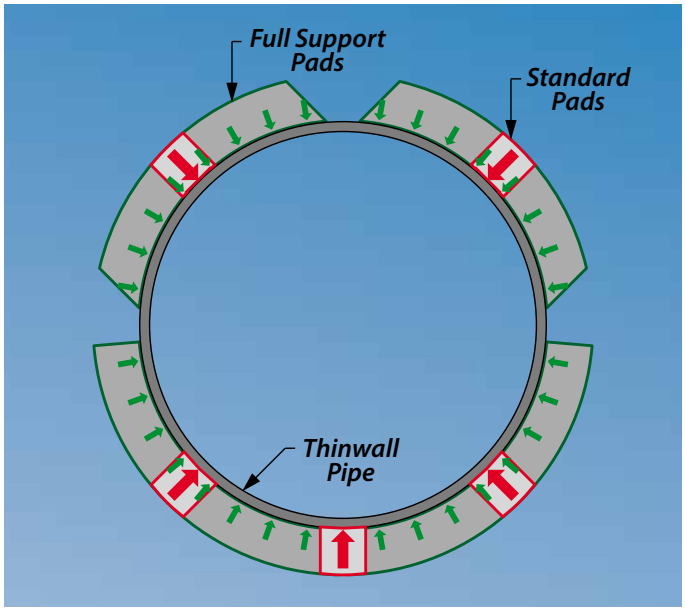

An illustration showing distribution of clamping force, a comparison is easy to make between the standard (Red) and Full Support Pads (Green).

• Automatic Tripper Disengage
The automatic tripper assembly features a spring-loaded pin that stops the tool bit feed at a preset travel point to control the depth of cut.

• Reversed Drive Housing
For use in tight clearance situations, the reversed drive housing positions the drive motor on the front side of the lathe.

• Back Mounted Support Rings
For special situations requiring additional rigidity or mounting flexibility, back support rings can be added. The back support rings provide a second row of offset jackscrews for improved mounting force distribution and positioning control.

• Roller Cutters
Also known as "chipless" cutters, roller cutters use sharp-edged wheels to sever thin wall tube or pipe. The cutting wheel is progressively fed into the pipe, displacing metal as it rolls, producing a cut without chips. This is valuable when chip contamination is a concern.

• Template Tracer Modules
This module is used to produce complex bevels on open-ended pipe. The template tracer follows a fixed profile template in order to transfer the desired bevel configuration to the pipe end when using single-point machining techniques.

• OD Tracking Modules
When working with "out-of-round" pipe, the OD tracking module uses a wheel which follows the pipe's outside diameter, constantly adjusting the tool bit position to provide the most consistent land thickness and bevel possible.

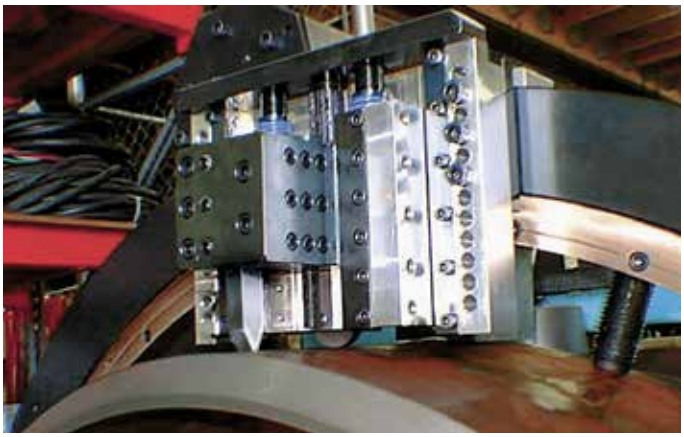

An OD Tracking Module accessory being utilized on a large SB clamshell. The Tracking Module compensates for out-of-round conditions by "reading" the pipe shape with a wheel, automatically adjusting cut depth.

• Clamshell Hinges
Hinges are installed across one side of the lathe's split-line for handling the two halves as one, useful during installation and/or transportation.

Hydraulic Power Supplies

Tri Tool's Hydraulic Power Supplies ensure reliable power for Tri Tool 600 Series Clamshells. Featuring a powerful electric motor (or by special order, gas or diesel engine) the supplies provide adjustable volume, constant flow pressure and responsive pumps. This adds up to optimum power delivery as required by pipe lathes that are designed to machine a wide range of pipe sizes and materials.



Model 765RVC

The **Model 765RVC** is a premium 20 GPM power supply with a low voltage full function remote control pendant. The pendant provides Stop/Start, Forward/Neutral/Reverse, and Volume control functions. Pendant extensions and hose kits allow operation of the lathes up to 200' away from the power supply. The unit incorporates full flow recirculation and reservoir filters, phase monitor to prevent reverse rotation or motor burn out due to phase loss or brown out, forward and reverse flow pressure bypass valves, oil cooler and thermal overload protection. Primary power for the 15 HP, 3 phase 50/60 Hz electric motor can be set for 208, 230, 380, 415, or 480 VAC.



Model 757RSS

The **Model 757RSS** is a 10 GPM, power supply with a low voltage remote Stop/Start pendant control. Forward/Reverse/Volume control functions are provided at the power supply. Pendant extensions and hose kits allow the operation of pipe lathes up to 200' away from the power supply (factory configuration required). Primary power for the 7.5 HP, 3 phase 50/60 Hz electric motor can be set for 208, 230, 380, 415 or 480 VAC.

14" to 60" RBL Clamshells

Maximum Portability and Economy

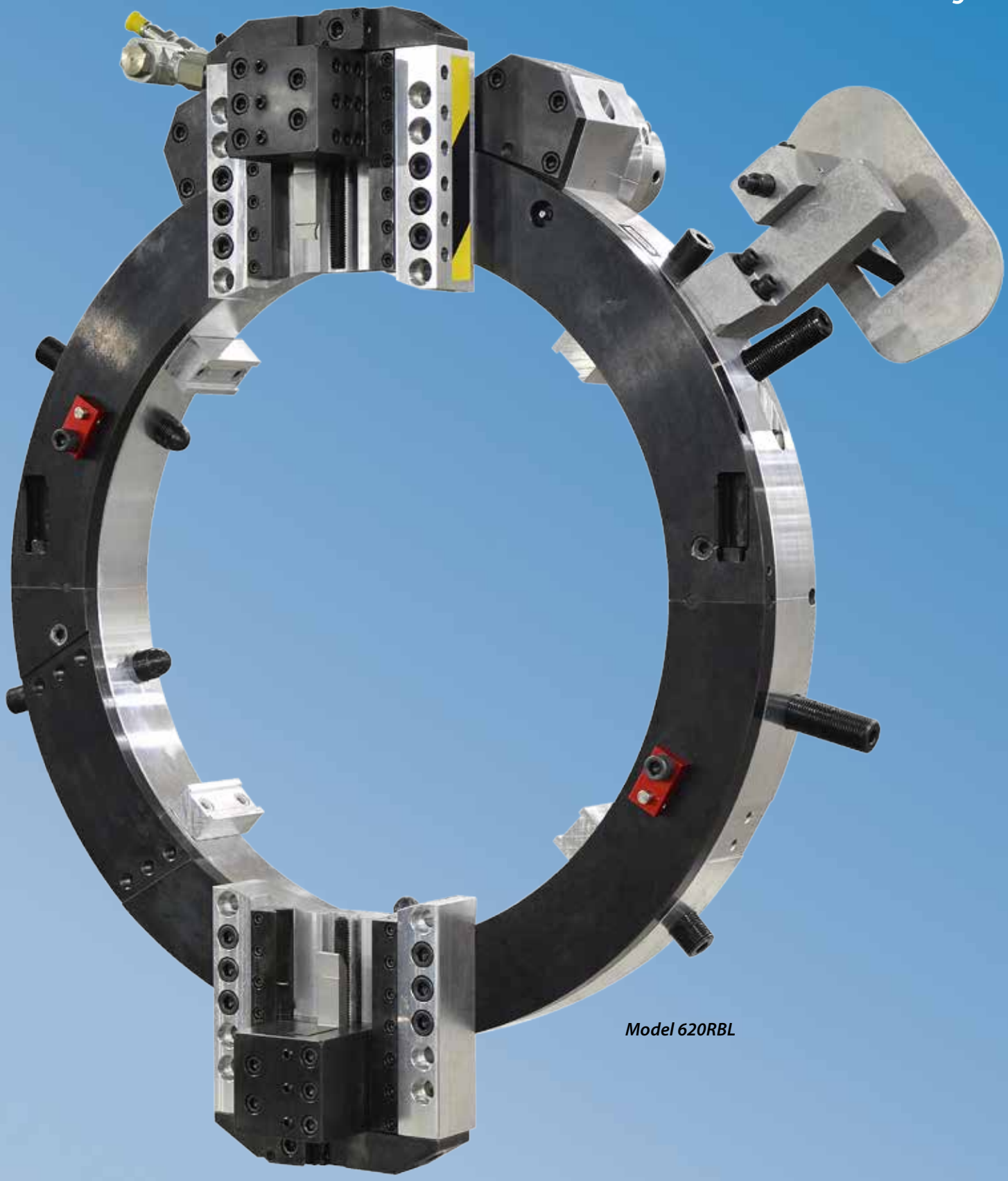

Model 620RBL

The 600 RBL series split frame lathes provide the highest degree of portability for applications where lighter weight and easier handling is an important advantage.

The RBL clamshells are designed to sever and bevel 7" through 60" in-line tube and pipe. These clamshells feature precise, lightweight vee-track roller bearings which feature low drag, with lower weight to maximize portability. As with the venerable SB series, set-up and operation of the RBL clamshell is simple and straightforward.



When you need reliable pipe cutting in tight spaces, the slim design RBL's are the perfect solution.

The RBL features adjustable bearings and tool slides to ensure long and dependable operation. Simultaneous sever and bevel operations are limited only by wall thickness.

With a wide range of clamshell sizes and models, Tri Tool Inc. can provide excellent matching of equipment to the work being performed.

RBL Features:

- New, updated tripper for operator safety
- Low friction, field adjustable, roller bearing system
- Sever and bevel simultaneously
- Requires low input horsepower
- Lightweight, easy to setup
- Worm drive tool modules reduce vibration and extend tool bit life
- Adjustable OD mounting system
- Cold cutting - means no heat affected zones
- Modular design to enhance interchangeability of parts
- Extended-reach tool modules for deep severs



The RBL fitted with accessories like the Model CBM-3 Counterbore Module above, can produce accurate lands, counterbores and weld prep profiles.

New Design RBL Series Tripper

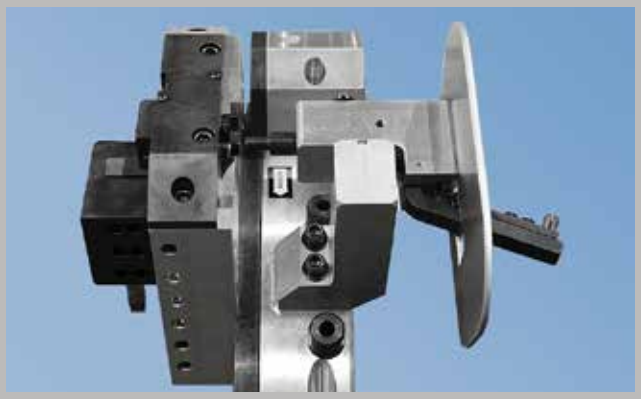

As part of Tri Tool Inc.'s commitment to safety, a new tripper mechanism has been designed for the 600 RBL Series Clamshell Lathes. This upgrade is being offered free of charge to all of our valued customers who own these models.

This upgrade improves the safety of all Clamshells by shifting the tripper mechanism further from the pinch point created by the rotating block containing the tool bit. This upgraded tripper assembly is easy to use and simply replaces the existing assembly, bolting onto the Clamshell frame in the same manner.

This redesigned component improves safety of use and limits the hazardous effects of operator error/ negligence. As such, it is recommended that the product not be used until the upgrade is installed.

Customers that have previously purchased one or more 600 RBL Series Clamshell Lathes are eligible for this free upgraded tripper mechanism. Please contact Tri Tool to arrange shipment of the new tripper mechanism and the associated User's Manual or fill out the request form for this upgrade at www.tritool.com.

Heavy Wall End Prep

TTM-1 (7″ to 36″ Pipe)

TTM-2 (42″ to 60″ Pipe)

TTM Single Point Machining Modules mount to standard tool module mounting holes and slots, and span across the rotating ring of the RBL clamshell.

Bevel, Face and Counterbore

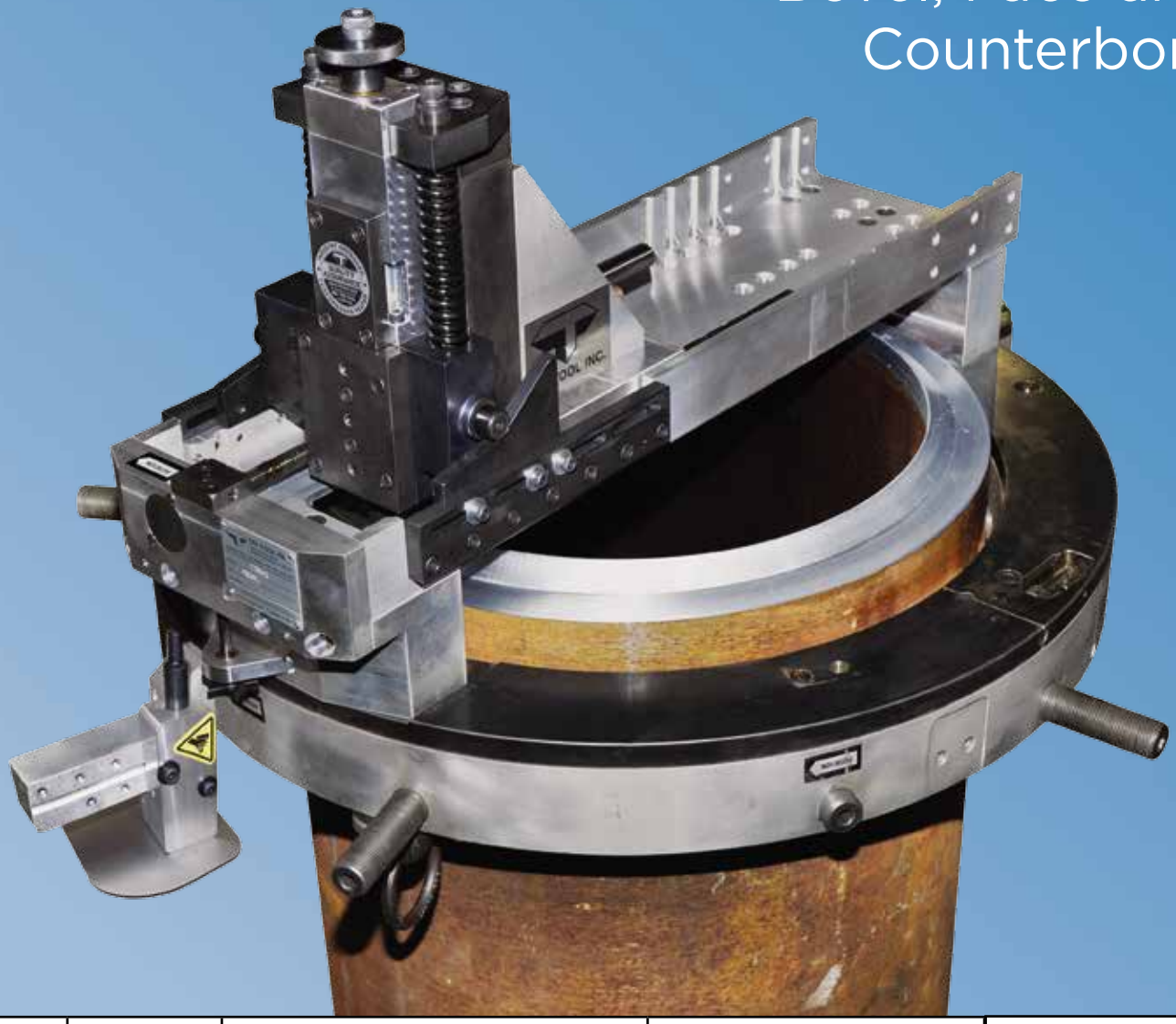

Model	RBL Size	RBL Pipe Range	Extension
TTM-1	614 RBL	7" - 14" (177.8 mm - 355.6 mm)	n/a
TTM-1	616 RBL	10" - 16" (273.1 mm - 406.4 mm)	n/a
TTM-1	620 RBL	14" - 20" (355.6 mm - 508.0 mm)	n/a
TTM-1	624 RBL	18" - 24" (457.2 mm - 609.6 mm)	624-630RBL Extension
TTM-1	630 RBL	24" - 30" (609.6 mm - 762.0 mm)	624-630RBL Extension
TTM-1	636 RBL	30" - 36" (762.0 mm - 914.4 mm)	636RBL Extension
TTM-2	648 RBL	42" - 48" (1066.8 mm - 1219.2 mm)	n/a
TTM-2	660 RBL	54" - 60" (1371.6 mm - 1524.0 mm)	660RBL Extension

Optional extensions expand TTM-1 capabilities to pipe sizes up to 36″ and TTM-2 up to 60.″

TTMs are perfect for light duty form tool applications such as counterboring and cutting a bevel radius, and producing weld bevels that have compound angles and radii.



Designed to utilize readily available and easy to source components, the Template Tracer Module cuts with standard tool holders and inserts.

Tri Tool's lightweight Template Tracer Module is engineered to rapidly bevel, face and counterbore up to 2.5" wall pipe. The TTMs' unique design handles the widest range of pipe sizes and allows for a quick switch from counterboring to single point beveling without removing the module from the pipe.

The Template Tracer Module delivers the versatility and economy of two tools with the durability and performance you expect from Tri Tool.

TTM Features:

- **Perform beveling, facing and counterboring.**
- **Precision feed produces optimal surface finishes.**
- **Aircraft grade aluminum for strength and light weight.**
- **No open gearing for operator safety.**
- **Quick and easy counterboring tooling change out.**



The simple and reliable spring-loaded TTM tool module follows a pair of adjustable templates, transferring the traced shape precisely to the pipe end.

Choose the Power Source you need.



*Single **Hydraulic** Motor.*



*Single or Dual **Pneumatic** Motors used in tandem (shown).*



*An **Electric** Motor is an option for quiet dependable power.*

SB and RBL lathes are powered by air, hydraulic, or electric motors, in configurations to match the input power requirements of the work being done. Note that an "Air Caddy" in-line air filter/lubricator is required for all Tri Tool equipment that uses pneumatic motors.

Special Engineering

Even with an extensive standard product line, some applications still require special engineering support.

With extensive OEM manufacturing experience and unique special engineering capabilities Tri Tool can help with all your special needs. Cutting capabilities can be expanded by modifying standard equipment or through the development of special accessories.

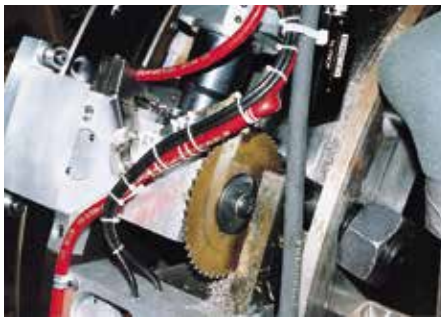

Clamshell mounted saw with video camera, designed to perform remote seal repair procedure in a nuclear power plant.

Our engineering department has a quarter century of experience in providing machine tool solutions to satisfy the most rigorous and demanding specifications for a wide range of industries.

Typical special engineering applications fall into several main categories which address specific elements of the machining process.

Custom RBL/AdaptARC® Welding Solution for Power Plant Repair



A custom 160" dia. RBL is shown suspended from a Tri Tool engineered support frame on a shaft mock-up for customer performance testing.

Tri Tool special engineering provided custom design and manufacturing for a comprehensive repair system that was successfully used to repair a power plant shaft. The damaged shaft surface was first cut out, the removed metal then replaced with Tri Tool's AdaptARC® multi-process welding system, and then the shaft re-machined to the final critical dimensions. All the operations were performed while mounted on the custom RBL Clamshell.



Clamshell configured to perform extremely accurate deep counterboring.

Clamping

Special accessories can be designed to clamp unique shapes or sensitive materials, difficult or automated cutting procedures to be performed or to provide extreme accuracy.

Automatic Bit Feed and Shut-Off

Standard manual tripper control pin mechanisms are not suitable for some remote operations or some specific cutting procedures. In those instances, special accessories have been developed to provide remote control over tool bit feed rate, machining speed, and depth of cut shut-off.

Special Tool Bits and Tool Bit Holders

Some situations or materials require the development of custom tooling to generate specific machining results. Special bit holders can be produced to replace the standard tool holders.

Remote Operation

An ongoing requirement of special engineering is for remote control when the clamshell is employed in hazardous environments.

Construction and maintenance projects being performed underwater require that the equipment be set-up by divers, a situation in which the clamshell's easy set-up is a clear advantage. While it is possible for a diver to operate the machine, the equipment can be powered, controlled and monitored from above.

Another typical need for remote operation arises in the nuclear power industry. Many of the critical maintenance operations are performed in high radiation areas where equipment characteristics such as reliability, precision and ease-of-use are not merely advantageous - they're mandatory.

Complete remote control stations can be developed to control maintenance projects involving the use of clamshells to limit the exposure of personnel to radiation during operation.

As a stable rotating platform, the clamshell can accept numerous accessories such as video cameras to monitor the work being done. Many maintenance operations in nuclear plants involve replacement of critical piping systems, fittings, and components.

The ability to cut with extreme accuracy without generating contaminated fumes or grinding debris makes the safety and control of the cold cutting operation superior to any other method. The clamshell, when combined with Tri Tool custom equipment manufacturing, has proven uniquely able to solve numerous problems for the nuclear industry in construction, maintenance, storage, decommissioning, and clean-up operations.

Special Operations

Accessories have been developed to perform many different operations such as to allow the normally OD mounted SB clamshell to be ID mounted for inside-out cutting.

Other examples include chipless roller wheel cutting with milling tools, automatic welding, grooving and other types of end finishing.



A small SB lathe fitted with a cut-off wheel module performs "chipless" cutting of thin-wall tubing.

While the need for a completely custom clamshell is usually not required, the importance of a critical or repetitive task can justify the need for custom machinery.

Tri Tool's special engineering team can develop and manufacture custom equipment based on proven designs, to meet virtually any project requirement or specific work situation. The clamshell lathe is an excellent choice for special OD mounted pipe machining applications.

You can depend on Tri Tool special engineering for thorough and experienced technical design and custom manufacturing assistance for any cutting or welding requirements you may have.

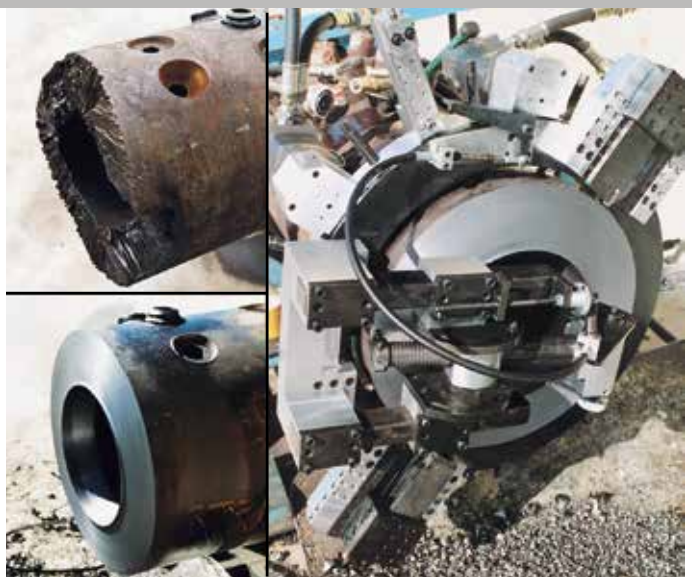

A 600 RBL series split frame lathe configured with a single point machining module generating a precision heavy wall "J Prep" weld profile and counterbore on a flame-cut pipe end.

600 Series Clamshells are the Ideal Platform for In-Line Machining.



This 600 Series Clamshell has been configured to perform precision in-line weld profiling. supporting the on-shore fabrication of tendon legs for offshore platforms.

As a precision bearing that can be split into two or more sections, the RBL and SB Clamshells have proven themselves time and time again as the ideal platform that can be configured for virtually any in-line machining procedure including milling, grooving, weld profiling, coating removal.

With a secure mounting system and rigid frames, Tri Tool's 600 Series machines produce excellent finishes and rapid results for countless projects in numerous industries.

Special engineering and manufacturing can provide unique and dependable solutions for anything from severing small tubing for semicon to large diameter systems for power and pipeline.

Specifications

NOTE: Contact Tri Tool for specs on the SBCM Series clamshells.

(RBL Model Shown)

① Drive housing
② Split Line
③ Locator Pad
④ Tool Module
⑤ Tool Holder
⑥ Tool Bit

Notes:
A. Pneumatic Motor (shown) 3.00" (76.2mm) up to 612SB, 3.5" (88.9mm) 616SB and larger.

B. Tripper Assembly not shown.

C. Actual rotating diameter may be less depending on configuration and pipe size.

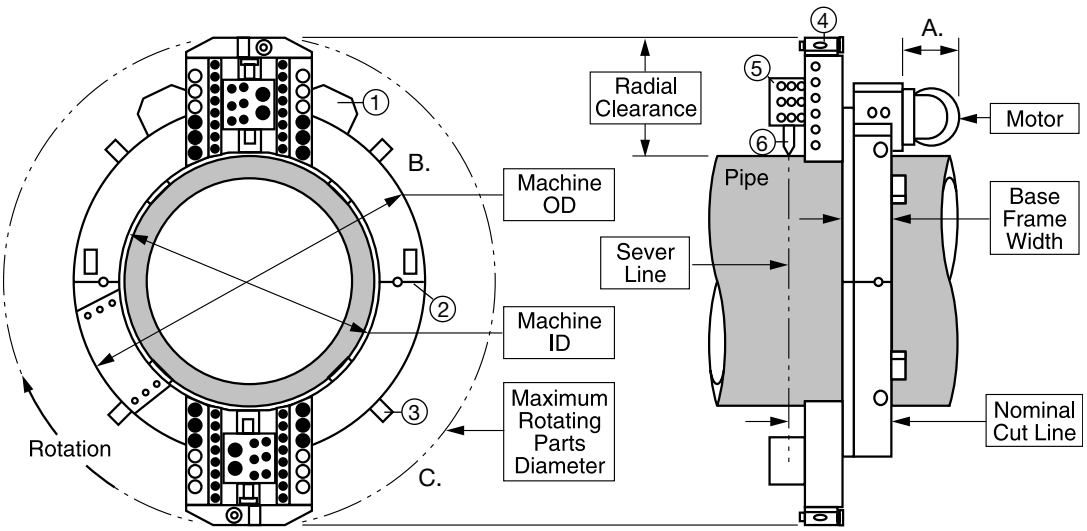

Model	Pipe Size Range	Radial Clearance	Machine Weight	Rotating Parts Diameter	Machine OD	Machine ID	Base Frame Width	Nominal Cut Line
	Inch (mm)	Inch (mm)	lbs. (kg)	Inch (mm)	Inch (mm)	Inch (mm)	Inch (mm)	Inch (mm)
601SBM	1/4 (13.7) - 1 (33.4)	2.00 (50.8)	11.5 (5.2)	5.31 (134.9)	5.31 (134.9)	1.44 (36.6)	2.00 (50.8)	3.50 (88.9)
602TSB	*1 1/2 (38.1) - *2 (50.8)	1.49 (37.8)	12.0 (5.4)	4.98 (126.5)	4.98 (126.5)	2.10 (53.3)	2.50 (63.5)	4.00 (101.6)
602.5SBM	1 (33.4) - *3 (76.2)	1.94 (49.3)	14.5 (6.6)	6.87 (174.5)	6.87 (174.5)	3.13 (79.5)	2.00 (50.8)	3.50 (88.9)
604SB	2 (60.3) - 4 (114.3)	2.25 (57.2)	29 (13.1)	9.00 (228.6)	9.00 (228.6)	4.75 (120.7)	3.00 (76.2)	4.50 (114.3)
606SB	3 (88.9) - 6 (168.3)	4.29 (109.0)	37 (16.8)	15.12 (384.0)	11.12 (282.4)	6.87 (174.5)	3.00 (76.2)	4.50 (114.3)
608SB	4 (114.3) - 8 (219.1)	4.29 (109.0)	43 (19.5)	17.12 (434.8)	13.12 (333.2)	8.95 (227.3)	3.00 (76.2)	4.50 (114.3)
610SB	6 (168.3) - 10 (273.1)	4.56 (115.8)	55 (25.0)	19.78 (502.4)	15.75 (400.1)	11.20 (284.5)	3.00 (76.2)	4.50 (114.3)
612SB	8 (219.1) - 12 (323.9)	4.56 (115.8)	62 (28.1)	21.78 (553.2)	17.75 (450.9)	13.20 (335.3)	3.00 (76.2)	4.50 (114.3)
616SB	12 (323.9) - 16 (406.4)	6.55 (166.4)	200 (91)	29.10 (739.1)	24.00 (609.6)	17.00 (431.8)	4.25 (108.0)	6.93 (176.0)
620SB	16 (406.4) - 20 (508.0)	6.63 (168.4)	320 (145)	33.25 (844.6)	29.20 (741.7)	21.20 (538.5)	4.90 (124.5)	7.58 (192.5)
624SB	20 (508.0) - 24 (609.6)	6.70 (170.2)	350 (159)	37.40 (950.0)	33.40 (848.4)	25.40 (645.2)	4.90 (124.5)	7.58 (192.5)
630SB	26 (660.4) - 30 (762.0)	6.75 (171.5)	420 (191)	43.50 (1104.9)	39.50 (1003.3)	31.50 (800.1)	4.90 (124.5)	7.58 (192.5)
636SB	32 (812.8) - 36 (914.4)	7.05 (179.1)	490 (223)	50.10 (1272.5)	46.00 (1168.4)	38.00 (965.2)	4.90 (124.5)	7.58 (192.5)
642SB	38 (965.2) - 42 (1066.8)	7.10 (180.3)	570 (259)	56.20 (1427.5)	52.00 (1320.8)	44.00 (1117.6)	4.90 (124.5)	7.58 (192.5)
648SB	44 (1117.6) - 48 (1219.2)	7.15 (181.6)	820 (372)	62.30 (1582.4)	58.00 (1473.2)	50.00 (1270.0)	5.75 (146.1)	8.43 (214.1)
614RBL	*7 (177.8) - 14 (355.6)	8.09 (205.5)	146 (66)	30.00 (762.0)	21.10 (535.9)	15.00 (381.0)	3.31 (84.1)	6.15 (156.2)
616RBL	10 (273.1) - 16 (406.4)	8.13 (206.5)	159 (72)	32.10 (815.3)	23.10 (586.7)	17.00 (431.8)	3.31 (84.1)	6.15 (156.2)
620RBL	14 (355.6) - 20 (508.0)	8.15 (207.0)	184 (83)	36.20 (919.5)	27.10 (688.3)	21.00 (533.4)	3.31 (84.1)	6.15 (156.2)
624RBL	18 (457.2) - 24 (609.6)	8.31 (211.1)	207 (94)	40.55 (1030.0)	31.10 (789.9)	25.00 (635.0)	3.31 (84.1)	6.15 (156.2)
630RBL	24 (609.6) - 30 (762.0)	8.34 (211.8)	239 (108)	46.65 (1184.9)	37.10 (942.3)	31.00 (787.4)	3.31 (84.1)	6.15 (156.2)
636RBL	30 (762.0) - 36 (914.4)	8.38 (212.9)	264 (120)	52.75 (1339.8)	43.10 (1094.7)	37.00 (939.8)	3.31 (84.1)	6.15 (156.2)
648RBL	42 (1066.8) - 48 (1219.2)	9.00 (228.6)	940 (427)	67.50 (1714.5)	60.00 (1524.0)	50.00 (1270.0)	5.13 (130.3)	7.97 (202.4)
660RBL	54 (1371.6) - 60 (1524.0)	9.00 (228.6)	1120 (508)	79.50 (2019.3)	72.00 (1828.8)	62.00 (1574.8)	5.13 (130.3)	7.97 (202.4)

The specifications listed above are presented to illustrate the wide range of configurations possible. Custom configurations are available.

Call your Tri Tool sales representative for assistance in determining which equipment and accessories are right for your requirements.

Measurements are for the basic machine fitted with standard tool modules. Optional low axial dimension tool modules are available for the 601SBM and 602.5SBM, and 606SB through 612SB. Radial Clearance and Max Rot. Dia. for 606SB to 612SB is shown for the standard 3 Position Tool Module.

Note: Measurements will vary from those indicated when machinery is configured for different pipe sizes and with different height tool modules.

Pipe size range is based on ANSI pipe dimensions. Pipe sizes indicated with (*) indicate tube sizes, not pipe sizes.

Machine weight is the lifting weight of the machine which includes the basic machine with standard tool modules.

Rotating parts diameter is the dimension across the face of the machine, including its moving parts (inner ring and standard tool modules) when the machine is set-up for the maximum pipe size for the specific model. The rotating parts diameter becomes less when tool modules are positioned inward to reach smaller pipes or when using special, low profile, or multiple position tool modules.

Nominal cut line is the dimension from the back of the machine to the center line of the tool bit slot.

THIS INFORMATION IS PROVIDED AS A GUIDELINE ONLY TO ASSIST WITH THE SELECTION OF EQUIPMENT AND ACCESSORIES. THIS INFORMATION IS SUBJECT TO CHANGE WITHOUT NOTICE. CONTACT YOUR SALES REPRESENTATIVE FOR SPECIFIC DETAILS OR TECHNICAL SPECIFICATIONS.

NOTE: Contact Tri Tool for specs on the SBCM Series clamshells.

● Standard
○ Special

	Tool Modules					Tool Holders, and Machining Accessories								Drive Options				
Model	Standard Modules (Low Profile)	Extended Modules	3 Position Modules	Heavy-Duty Modules	Heavy-Duty Sever Modules	Socket Weld Removal Kit	Heavy-Duty Sever Tool Holders	Carbide Sever Tool Holders	Low Axial Clearance Tool Holders	Counterbore Module	Single-Point Module	Reversed Drive Housing Kit	Upgraded Tripper Mechanism	Pneumatic (Single)	Pneumatic (Dual)	Electric (Single)	Hydraulic (Single)	Hydraulic (Dual)
601SBM	●[1]					●				●				●				
602TSB	●									●				●				
602.5SBM	●[1]					●				●				●		●	○	
604SB	●[2]	●		○		●		○		●		●	●	●		●	○	
606SB	●[2]	●	●	○		●		○		●		●	●	●		●	○	
608SB	●[2]	●	●	○		●		○		●		●	●	●		●	○	
610SB	●[2]	●	●	○		●		○		●		●	●	●		●	○	
612SB	●[2]	●	●	○		●		○		●		●	●	●		●	○	
616SB	○	●		●	●			○	○	●	●	○	●		●			●
620SB	○	●		●	●			○	○	●	●	○	●		●			●
624SB	○	●		●	●			○	○	●	●	○	●		●			●
630SB	○	●		●	●			○	○	●	●	○	●		●			●
636SB	○	●		●	●			○	○	●	●	○	●		●			●
642SB	○	●		●	●			○	○	●	●	○	●		●			●
648SB	○	●		●	●			○	○	●	●	○	●		●			●
614RBL		●					●	●	●	●	●	○	●	●	●	●	●	●
616RBL		●					●	●	●	●	●	○	●	●	●	●	●	●
620RBL		●					●	●	●	●	●	○	●	●	●	●	●	●
624RBL		●					●	●	●	●	●	○	●	●	●	●	●	●
630RBL		●					●	●	●	●	●	○	●	●	●	●	●	●
636RBL		●					●	●	●	●	●	○	●	●	●	●	●	●
648RBL		●					●	●	●	●	●	○	●		●			●
660RBL		●					●	●	●	●	●	○	●		●			●

1 Tool modules which reduce the required axial perch length are available for the 601SBM and 602.5SBM clamshells.
2 On the 604SB through 612SB clamshells the standard tool modules do not extend outside of the OD of the machine.

Tool Modules (function)- Tool modules mount on the rotating face of the clamshell and carry the tool bits within the tool holder section. The tool bit is fed into (towards) the pipe a fixed increment for each revolution of the head stock with one tripper pin assembly engaged. Multiple trippers increase the total feed of the tool bit per revolution.

Standard (Low Profile) Tool Modules- Standard or Low Profile modules fit within the OD of the clamshell to minimize the radial clearance required. Normally they only function on the largest pipe size that fits within the Clamshell.

Extended Tool Modules- Extended tool modules provide longer tool bit feed travel and a greater pipe size range. When mounted for the largest pipe size that fits the clamshell the modules extend outside the OD of the clamshell, requiring more radial clearance, but also allow mounting inboard to reach smaller pipe sizes.

3 Position Tool Modules- Permit cutting on one size smaller pipe (compared to Extended Modules) when using a 606SB through 612SB Clamshell.

Heavy Duty Tool Modules- Heavy Duty Tool Modules allow use of heavier tool bits for extremely heavy cutting operations.

Heavy Duty Sever Modules- Heavy Duty Sever Modules use part-off blades to extend the reach of the cutting tool for deep sever operations.

Tool Holders - Tool Holders install into the Tool Modules to allow the Module to perform different functions, fit limited space or use alternate tooling.

Machining Accessories

- *Socket weld removal kits contain the special tool holders and parts to equip the clamshell for machining the fillet welds off of a socket weld joint.*
- *Counterbore kits mount to the tool modules to allow the machining of a counterbore (on open ended pipe).*
- *Singlepoint modules provide full lathe type machining operations on open ended pipe.*

Drive Motors- Clamshells can be driven with pneumatic motors which provide the maximum power per unit weight, electric motors for light duty machining (HP per unit volume restricts the maximum HP motors that can be fitted) and hydraulic motors which provide the maximum power and speed range capabilities at the machine (a separated power supply is required). Dual drives can be fitted for additional power and machining capabilities as required.

Special Options- Special options not shown include: full support pads for thin wall pipe or tube (some pipe size restrictions apply due to space requirements to incorporate the pads), out-of-round tracking modules to machine the prep concentric to the OD without rounding the pipe, custom tool bit configurations, back-support rings for added mounting rigidity, etc.

THIS INFORMATION IS PROVIDED AS A GUIDELINE ONLY TO ASSIST WITH THE SELECTION OF EQUIPMENT AND ACCESSORIES. THIS INFORMATION IS SUBJECT TO CHANGE WITHOUT NOTICE. CONTACT YOUR SALES REPRESENTATIVE FOR SPECIFIC DETAILS OR TECHNICAL SPECIFICATIONS.

Clamshell On-Site Service

Get 600 Series versatility, along with experienced, reliable operation.

When you are challenged with an in-line machining requirement that you absolutely need to get done right the first time, call Tri Tool Services. Their expert staff of experienced field machining and code welding technicians are backed with state-of-the-art equipment and OEM support. This guarantees that you get the experience and project-optimal equipment that your most important work requires.

Tri Tool Service technicians can perform a comprehensive range of machining and welding operations, and can assist you with new Clamshell purchases through on-location operation training, for your machining personnel or for your safety program.



This Model 660RBL is being used with the mounting screws and tool modules turned to cut from the inside out. Tri Tool's Services Division can assist you with custom and innovative equipment solutions for your special machining and code welding requirements.

Clamshell Rental Options

Tri Tool Clamshells can be rented, providing a cost-effective alternative for projects or unplanned outages.



Each returning Clamshell is thoroughly inspected and adjusted by expert technicians, ensuring "like new" operation and ready-to-rent status.

Tri Tool maintains a nationwide network of stocking rental facilities to ensure that you get the equipment at competitive rates, when and where you need it. Offices in Rancho Cordova CA, Atlanta GA, Houston TX, and Columbus OH provide localized technicians and parts inventories, and you can return equipment to your nearest facility, saving you money.

With our flexible rental program you can try out Tri Tool equipment before you buy!

Should you decide that you want to buy the rented equipment within the first 30 days of rental, Tri Tool offers a pro-rated schedule that applies rental costs to a purchase price. You get up to a month's rental free!

Renting equipment with the option to buy is a popular and affordable way to experience first-hand, how a Clamshell lathe can be an important, versatile, high performance addition to your in-place machining equipment.

Call today for more information.

© Copyright Tri Tool Inc.
All rights reserved. PN 81-0038 (01-14)

TRI TOOL
BUILDING PERFORMANCE

3041 SUNRISE BLVD.
RANCHO CORDOVA, CA 95742
800.345.5015
WWW.TRITOOL.COM