ProArc®
Since 1966

CW-350/600R

Circumferential Welder

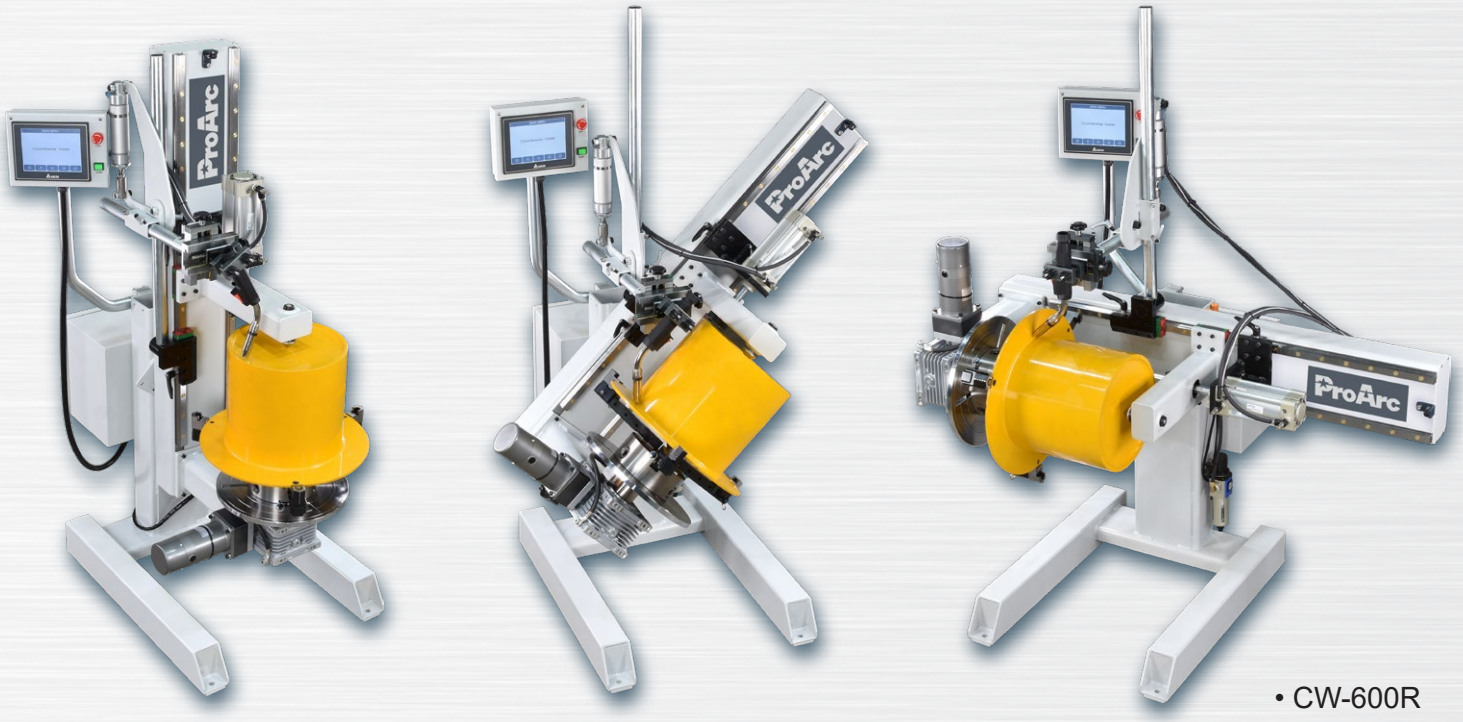

• CW-600R

The Circumferential Welder provides lathe welding for tubes, pipes and vessels with simple operation and high-quality welds. It optimizes processes, reduces welding costs and improves weld quality.

Features

- Digital PLC control for flexible welding settings and programmable sequences
- Features alarm history, messages and PLC I/O monitoring
- Main frame tilt design supports 7 angular position from vertical to horizontal position
- Multi-function welding bracket for all-position welding
- Pneumatic torch actuator with 100 mm stroke for precise torch positioning
- Supports TIG, MIG, Plasma and Sub-Arc welding process
- Tested for high frequency resistance

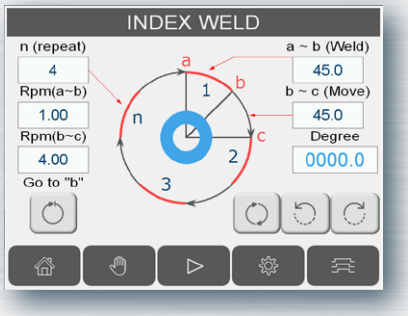

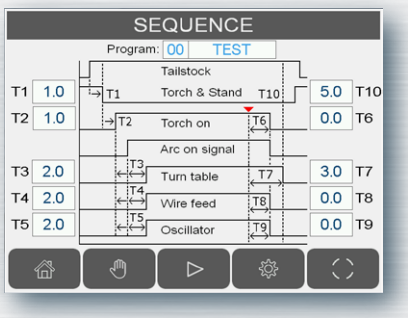

Specification

Model	Unit	CW-350R	CW-600R
Power input		1Ø 110~240VAC 50/60Hz	
Drive motor	hp	1/12	
Capacity	kg	130	
Welding equipment capacity	kg	10	
Table dimension	mm	Ø320	
Part dimension	mm	Ø350	Ø600
Rotation speed	rpm	A:0.3~4 B:0.6~8	C:0.8~12 D:1~16
Through hole diameter	mm	Ø22	
Table slot bolt size		M10	
Earthing	amp	300	
Dimension (A x B x C)	mm	875 x 630 x 1,450	980 x 630 x 1,450
Part length (D)	mm	600	
Tailstock stroke (E)	mm	75	
Weight	kg	175	190

※ Specifications are subject to change without prior notice.

Dimensions

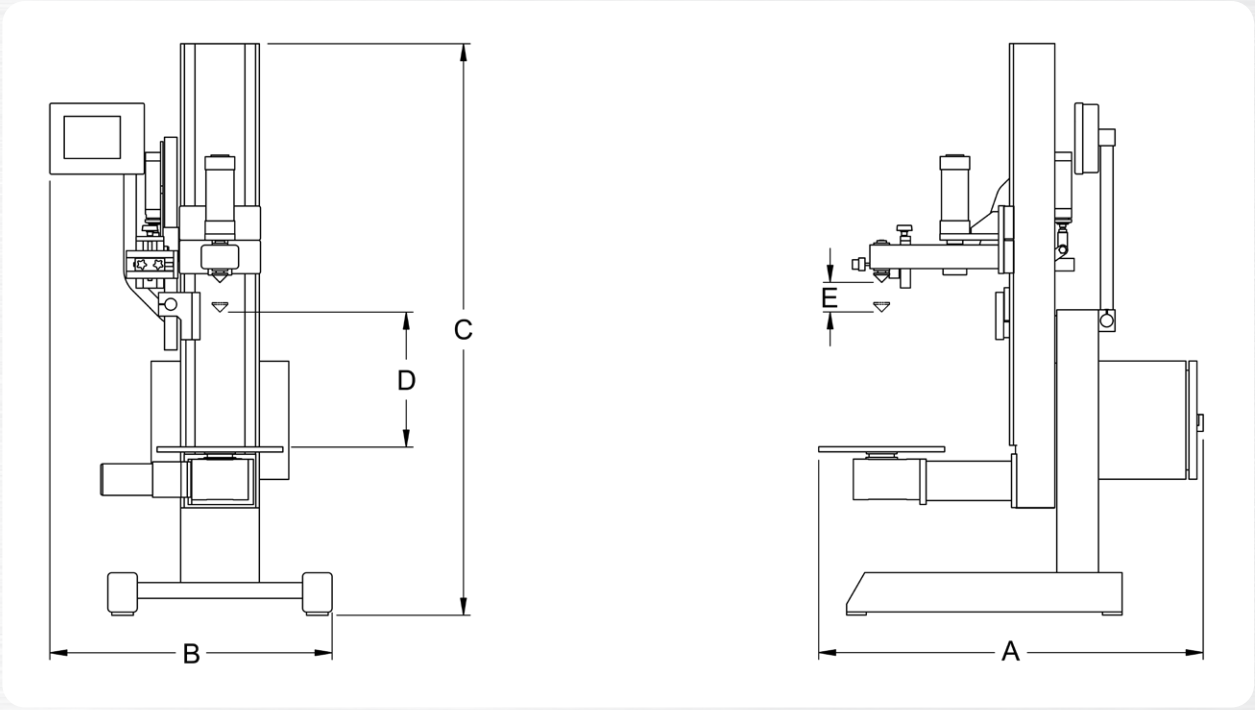

United ProArc Corporation

www.proarc.com.tw

Tel : 886-3-4696600 Fax : 886-3-4694499 E-mail : sales@proarc.com.tw

No.8 Gungye 2nd Road, Pingjen Industrial Park, Pingjen Dist.,Taoyuan City 324403, Taiwan